SOLARS

FOTOVOLTAICO

FT9404OP

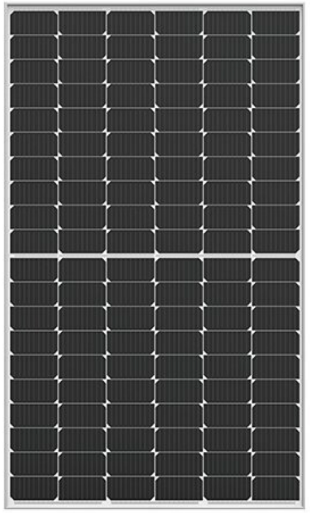

Numero di catalogo	FT9404OP
Codice Prodotto	FV410-A1
Potenza	410W
Voltage at Pmax	31.40V
Current at Pmax	13.06A
Open-Circuit Current	37.30V
Short-Circuit Current	13.93A
Articoli per scatola	30
Temperatura	-40°C/ +85°C
Dimensioni del prodotto	1722x1134x30mm
Dimensioni della scatola	1155x1745x1065 mm
	180x110x130 cm / 30pcs

FOTOVOLTAICO

FT9405OP

Numero di catalogo	FT9405OP
Codice Prodotto	FV550-A1
Rated Maximum Power	550W
Open-Circuit Voltage	49.80V
Short-Circuit Current	13.94A
	42.20V
Maximum System Voltage	DC1500V
All technical standard test condition	AM1.5 E=1000W/m² Tc=25°C
Weight	27.8kg
Dimensions	2279x1134x35 mm
Safety Class	Class II
	230x112x127 cm / 31pcs
Garanzia	Product warranty 12 years/25 years up to 85% output power

Dimensions of PV Module Unit: mm

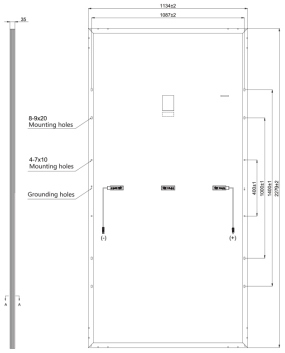

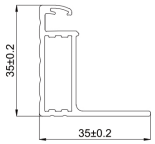

A

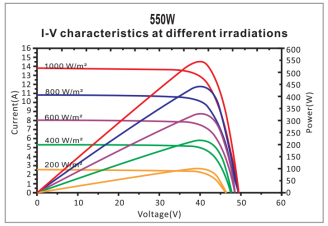

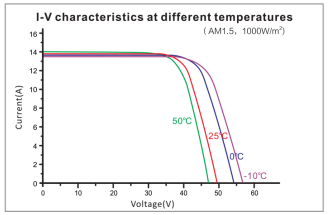

ELECTRICAL DATA (STC)

Model Number	**9405**
Rated Power in Watts-Pmax(Wp)	**550**
Open Circuit Voltage-Voc(V)	49.80
Short Circuit Current-Isc(A)	13.94
Maximum Power Voltage-Vmpp(V)	42.20
Maximum Power Current-Impp(A)	13.04
Module Efficiency (%) ★	21.3

STC: Irradiance 1000 W/m², Cell Temperature 25°C, Air Mass AM1.5 according to EN 60904-3.
★ Module Efficiency (%): Round-off to the nearest number

ELECTRICAL DATA (NMOT)

Model Number	**9405**
Maximum Power-Pmax (Wp)	409.4
Open Circuit Voltage-Voc (V)	46.96
Short Circuit Current-Isc (A)	11.43
Maximum Power Voltage-Vmpp (V)	39.00
Maximum Power Current-Impp (A)	10.50

NMOT: Irradiance at 800 W/m², Ambient Temperature 20°C, Wind Speed 1 m/s.

MECHANICAL DATA

Solar cells	Monocrystalline
Cell configuration	144 cells (6×12+6×12)
Module dimensions	2279×1134×35mm
Weight	27.8kg
Superstrate	High Transmission, Low Iron, Tempered ARC Glass
Substrate	White Back-sheet
Frame	Anodized Aluminium Alloy type 6005-2T6, Silver Color
J-Box	Potted, IP68, 1500VDC, 3 Schottky bypass diodes
Cables	4.0mm² (12AWG), Positive(+)350mm, Negative(-)350mm (Connector Included)
Connector	Risen Twinsel PV-SY02, IP68

TEMPERATURE & MAXIMUM RATINGS

Nominal Module Operating Temperature (NMOT)	44°C±2°C
Temperature Coefficient of Voc	-0.275%/°C
Temperature Coefficient of Isc	0.045%/°C
Temperature Coefficient of Pmax	-0.35%/°C
Operational Temperature	-40°C~+85°C
Maximum System Voltage	1500VDC
Max Series Fuse Rating	25A
Limiting Reverse Current	25A

PACKAGING CONFIGURATION

	40ft(HQ)
Number of modules per container	620
Number of modules per pallet	31
Number of pallets per container	20
Packaging box dimensions (LxWxH) in mm	2325×1150×1250
Box gross weight[kg]	910

CAUTION: READ SAFETY AND INSTALLATION INSTRUCTIONS BEFORE USING THE PRODUCT.

info@led4led.com www.led4led.com
Fotovoltaico
Solar panels

FOTOVOLTAICO

FT9407OP

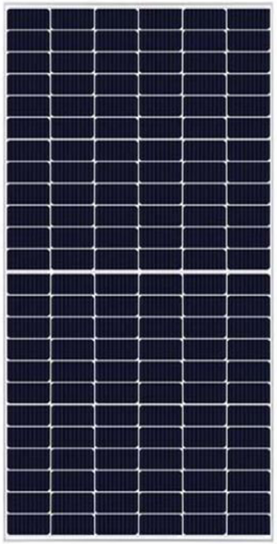

Numero di catalogo	FT9407OP
Codice Prodotto	FV450-A1
Rated Maximum Power	450 W
Open-Circuit Voltage	49.70V
Short-Circuit Current	11.50A
	41.30V
Maximum System Voltage	DC1500V
All technical standard test condition	AM1.5 E=1000W/m² Tc=25°C
Weight	21kg
Dimensions	2108x1048x35 mm
Safety Class	Class II
	215x115x120 cm / 31pcs
Garanzia	Product warranty 12 years/25 years up to 85% output power

Dimensions of PV Module Unit: mm

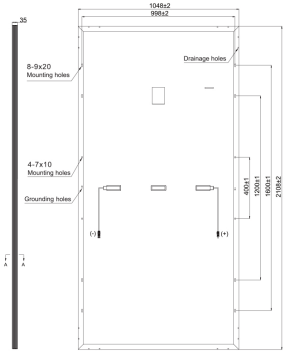

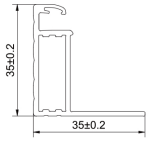

A

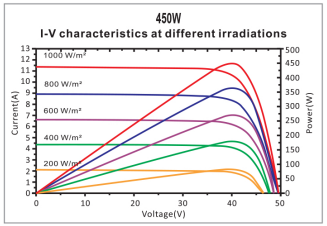

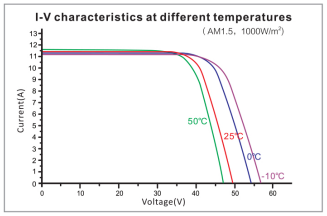

ELECTRICAL DATA (STC)

Model Number	**9407**
Rated Power in Watts-Pmax(Wp)	**450**
Open Circuit Voltage-Voc(V)	49.70
Short Circuit Current-Isc(A)	11.50
Maximum Power Voltage-Vmpp(V)	41.30
Maximum Power Current-Impp(A)	10.90
Module Efficiency (%) ★	20.4

STC: Irradiance 1000 W/m², Cell Temperature 25°C, Air Mass AM1.5 according to EN 60904-3.
★ Module Efficiency (%): Round-off to the nearest number

ELECTRICAL DATA (NMOT)

Model Number	**9407**
Maximum Power-Pmax (Wp)	338.2
Open Circuit Voltage-Voc (V)	46.43
Short Circuit Current-Isc (A)	9.43
Maximum Power Voltage-Vmpp (V)	38.00
Maximum Power Current-Impp (A)	8.90

NMOT: Irradiance at 800 W/m², Ambient Temperature 20°C, Wind Speed 1 m/s.

MECHANICAL DATA

Solar cells	Monocrystalline 166×83mm
Cell configuration	144 cells (6×12+6×12)
Module dimensions	2108×1048×35mm
Weight	24.5kg
Superstrate	High Transmission, Low Iron, Tempered ARC Glass
Substrate	White Back-sheet
Frame	Anodized Aluminium Alloy type 6063-T5, Silver Color
J-Box	Potted, IP68, 1500VDC, 3 Schottky bypass diodes
Cables	4.0mm² (12AWG), Positive(+)350mm, Negative(-)350mm (Connector Included)
Connector	PV-SY02, IP68

TEMPERATURE & MAXIMUM RATINGS

Nominal Module Operating Temperature (NMOT)	44°C±2°C
Temperature Coefficient of Voc	-0.29%/°C
Temperature Coefficient of Isc	0.05%/°C
Temperature Coefficient of Pmax	-0.37%/°C
Operational Temperature	-40°C~+85°C
Maximum System Voltage	1500VDC
Max Series Fuse Rating	20A
Limiting Reverse Current	20A

PACKAGING CONFIGURATION

	40ft(HQ)	20ft
Number of modules per container	682	155
Number of modules per pallet	31	31
Number of pallets per container	22	5
Packaging box dimensions (LxWxH) in mm	2140×1135×1180	2140×1135×1180
Box gross weight[kg]	815	815

CAUTION: READ SAFETY AND INSTALLATION INSTRUCTIONS BEFORE USING THE PRODUCT.

info@led4led.com www.led4led.com
Fotovoltaico
Solar panels

FOTOVOLTAICO

FT9408OP

Numero di catalogo	FT9408OP
Codice Prodotto	PV445-A1
Rated Maximum Power	445 W
Open-Circuit Voltage	45.09 V
Short-Circuit Current	12.57 A
Maximum System Voltage	37.54 V DC1500V
All technical standard test condition	AM1.5 E=1000W/m² Tc=25°C
Weight	22.5kg
Dimensione	1894x1096x30mm
Safety Class	Class II
Garanzia	Product warranty 12 years/25 years up to 85% output power

Dimensions of PV Module Unit: mm

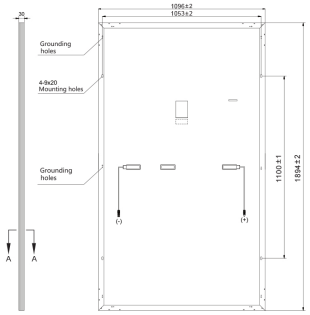

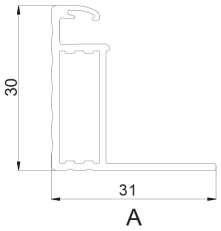

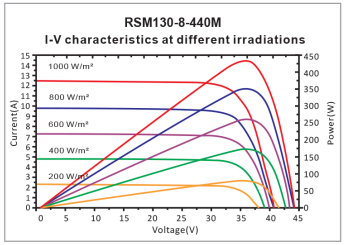

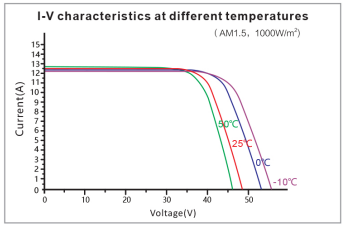

ELECTRICAL DATA (STC)

Model Number	9408
Rated Power in Watts-Pmax(Wp)	**445**
Open Circuit Voltage-Voc(V)	45.09
Short Circuit Current-Isc(A)	12.57
Maximum Power Voltage-Vmpp(V)	37.54
Maximum Power Current-Impp(A)	11.86
Module Efficiency (%) ★	21.4

STC: Irradiance 1000 W/m², Cell Temperature 25°C, Air Mass AM1.5 according to EN 60904-3.
★ Module Efficiency (%): Round-off to the nearest number

ELECTRICAL DATA (NMOT)

Model Number	9408
Maximum Power-Pmax (Wp)	337.1
Open Circuit Voltage-Voc (V)	41.93
Short Circuit Current-Isc (A)	10.31
Maximum Power Voltage-Vmpp (V)	34.84
Maximum Power Current-Impp (A)	9.68

NMOT: Irradiance at 800 W/m², Ambient Temperature 20°C, Wind Speed 1 m/s.

MECHANICAL DATA

Solar cells	Monocrystalline
Cell configuration	130 cells (5×13+5×13)
Module dimensions	1894×1096×30mm
Weight	22.5kg
Superstrate	High Transmission, Low Iron, Tempered ARC Glass
Substrate	White Back-sheet
Frame	Anodized Aluminium Alloy type 6005-2T6, Black
J-Box	Potted, IP68, 1500VDC, 3 Schottky bypass diodes
Cables	4.0mm² (12AWG), Positive(+)350mm, Negative(-)350mm (Connector Included)
Connector	Risen Twinsel PV-SY02, IP68

TEMPERATURE & MAXIMUM RATINGS

Nominal Module Operating Temperature (NMOT)	44°C±2°C
Temperature Coefficient of Voc	-0.25%/°C
Temperature Coefficient of Isc	0.04%/°C
Temperature Coefficient of Pmax	-0.34%/°C
Operational Temperature	-40°C~+85°C
Maximum System Voltage	1500VDC
Max Series Fuse Rating	20A
Limiting Reverse Current	20A

PACKAGING CONFIGURATION

	40ft(HQ)	20ft
Number of modules per container	864	216
Number of modules per pallet	36	36
Number of pallets per container	24	6
Packaging box dimensions (LxWxH) in mm	1910×1120×1236	1910×1120×1236
Box gross weight[kg]	860	860

CAUTION: READ SAFETY AND INSTALLATION INSTRUCTIONS BEFORE USING THE PRODUCT.

LED4LED info@led4led.com www.led4led.com
Fotovoltaico
Solar panels

FOTOVOLTAICO

FT9438OP

Numero di catalogo	FT9438OP
Codice Prodotto	I6-A1
Product type	Hybrid Inverter
IP	65
Temperatura	-40°C/ +60°C

Model	SKU: 9437	SKU: 9438
Battery Input Data		
Battery Type	Lead-acid or Li-Ion	
Battery Voltage Range (V)	40~60	
Max. Charging Current (A)	120	135
Max. Discharging Current (A)	120	135
External Temperature Sensor	Yes	
Charging Curve	3 Stages / Equalization	
Charging Strategy for Li-Ion Battery	Self-adaption to BMS	
PV String Input Data		
Max. DC Input Power (W)	6500	7800
Rated PV Input Voltage (V)	370 (125~500)	
Start-up Voltage (V)	125	
MPPT Voltage Range (V)	150-425	
Full Load DC Voltage Range (V)	300-425	
PV Input Current (A)	13+13	
Max. PV I_{SC} (A)	17+17	
No.of MPP Trackers	2	
No.of Strings per MPP Tracker	1	
AC Output Data		
Rated AC Output and UPS Power (W)	5000	6000
Max. AC Output Power (W)	5500	6600
AC Output Rated Current (A)	22.7/21.7	27.3/26.1
Max. AC Current (A)	25/23.9	30/28.7
Max. Continuous AC Passthrough (A)	35	40
Peak Power (off grid)	2 time of rated power, 10 S	
Power Factor	0.8 leading to 0.8 lagging	
Output Frequency and Voltage	50/60Hz; L/N/PE 220/230Vac (single phase)	
Grid Type	Single Phase	
Total Harmonic Distortion (THD)	<3% (of nominal power)	
DC current injection	<0.5% In	
Efficiency		
Max. Efficiency	97.60%	
Euro Efficiency	96.50%	
MPPT Efficiency	99.90%	
Protection		
Integrated	PV Input Lightning Protection, Anti-islanding Protection, PV String Input Reverse Polarity Protection, Insulation Resistor Detection, Residual Current Monitoring Unit, Output Over Current Protection, Output Shorted Protection, Surge protection	
Output Over Voltage Protection	DC Type II/AC Type III	
Certifications and Standards		
Grid Regulation	VDE4105, IEC61727/62116, VDE0126, AS4777.2, CEI 0 21, EN50549-1, G98, G99, C10-11, UNE217002, NBR16149/NBR16150	
Safety EMC / Standard	IEC/EN 61000-6-1/2/3/4, IEC/EN 62109-1, IEC/EN 62109-2	
General Data		
Operating Temperature Range (℃)	-40~60˚C, >45˚C derating	
Cooling	Natural cooling	
Noise (dB)	<30 dB	
Communication with BMS	RS485; CAN	
Weight (kg)	20.5	
Size (mm)	330W x 580H x232D	
Protection Degree	IP65	
Installation Style	Wall-mounted	
Warranty	10 years	

LED4LED info@led4led.com www.led4led.com
Fotovoltaico
Solar panels

FOTOVOLTAICO

FT9431OP

Numero di catalogo	FT9431OP
Codice Prodotto	OT1-B2
Product type	Inverter
	2*MC4 / PV 2*210-400W
uscita	230Vac 600W
	25-55V 2-13A
IP	67
Dimensions	213x230x40mm
Weight	3.15 kg
Garanzia	10 years

FOTOVOLTAICO

FT9439OP

Numero di catalogo	FT9439OP
Codice Prodotto	B6000-A1
Nominal Capacity	120Ah
Nominal Energy	6.14kWh
Nominal Voltage	51.2Vdc
Operating Voltage Range	43.2-57.6Vdc
Nominal Charge/Discharge Current	60A
IP	65
Temperatura	-20°C/ +40°C
	80x60x43cm
Weight of Product	63.4kg

FOTOVOLTAICO

FT9491OP

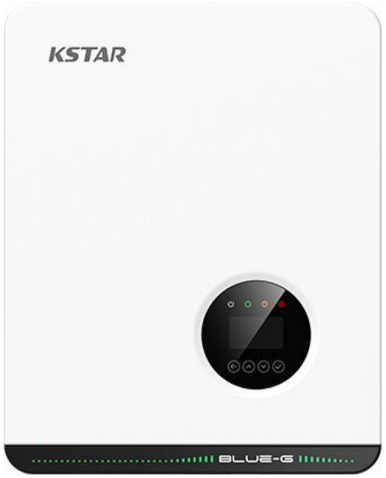

Numero di catalogo	FT9491OP
Product type	Inverter
IP	66
Display	LCD
Garanzia	5 Years

SKU:9491

MODEL				BluE-10KT			
Input(DC)							
Max. DC Voltage				1100V			
Nominal Voltage				620V			
Start Voltage				180V			
MPPT Voltage Range				140 V~1,000 V			
Number of MPPT Tracker				2			
Strings Per MPPT Tracker				1			
Max. Input Current Per MPPT				15A			
Max. Short-circuit Current Per MPPT				20A			
Output(AC)							
Nominal AC Output Power				10000W			
Maximum AC Output Power				11000VA			
Nominal AC Voltage	400V 3L+N						
AC Grid Frequency Range	50 / 60Hz(±5Hz)						
Maximum Output Current				16.0A			
Power Factor(Φ)	0.8leading-0.8lagging						
THDi	3%						
Efficiency							
Max. Efficiency				98.6%			
Euro Efficiency				98.1%			
Protection devices							
DC Switch	Yes						
Output Over Current	Yes						
Anti-islanding Protection	Yes						
DC Reverse Polarity Protection	Yes						
String Fault Detection	Yes						
AC/DC Surge Protection	DC: Type II / AC: Type III / Type II Optional						
Insulation Detection	Yes						
AC Short Circuit Protection	Yes						
General Specifications							
Dimensions W x H x D	380x483x161mm						
Weight	<17kg						
Operating Temperature Range	–25℃~+60℃						
Cooling Type	Natural cooling						
Max. Operation Altitude	4000m						
Max. Operation Humidity	0-100%(No condensation)						
AC Output Terminal Type	Connector						
IP Class	IP66						
Topology	Transformer-less						
Communication	RS485/Wifi/4G						
Display	LCD						
Certification & Standard	EN/IEC62109-1/2 ; IEC/EN61000-6-2;IEC/EN61000-6-4;IEC61683;IEC60068;IEC60529;IEC62116;IEC61727; EN50549-1;AS 4777.2;VDE-AR-N-4105;VDE 0126-1-1;CEI0-21;G98;G99;C10/C11;NB/T32004-2018 ; GB/T19964-2012						

* Specifications subject to change without prior notice.

LED4LED info@led4led.com www.led4led.com
Fotovoltaico
Solar panels

FOTOVOLTAICO

FT94920P

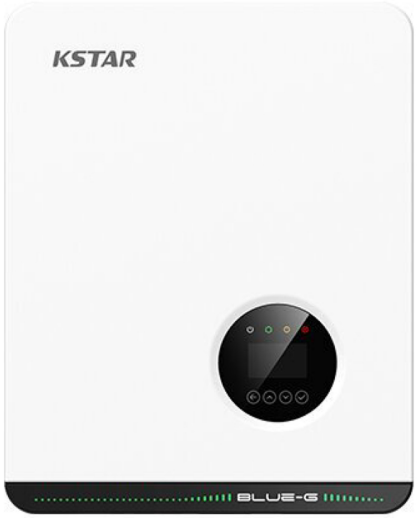

Numero di catalogo	FT94920P
Product type	Inverter
IP	66
	LCD
Garanzia	5 Years

MODEL		KSG-30KT (SKU:9492)	KSG-40KT (SKU:9493)
Input(DC)			
Max. remonmmended PV power		45000W	60000W
Max. DC voltage		1100V	1100V
Nominal voltage		600V	600V
Start voltage		180V	180V
MPPT voltage range		200 V~1,000V	200 V~1,000V
Number of MPPT tracker		3	3
Strings per MPPT tracker		2	2
Max. input current per MPPT		30A	30A
Max. short-circuit current per MPPT		50A	50A
Output(AC)			
Nominal AC output power		30000W	40000W
Maximum AC output power		33000VA	44000VA
Nominal AC voltage	400V 3L+N		
AC grid frequency range	50 / 60Hz(±5Hz)		
Maximum output current		47.7A	63.6A
Power factor(Φ)	0.8leading-0.8lagging		
THDi	3%		
Efficiency			
Max. efficiency		98.7%	98.7%
Euro efficiency		98.4%	98.4%
Protection devices			
DC switch	Yes		
Output over current	Yes		
Anti-islanding protection	Yes		
DC reverse polarity protection	Yes		
String fault Detection	Yes		
AC/DC surge protection	Type II		
Insulation detection	Yes		
AC short circuit protection	Yes		
General Specifications			
Dimensions W x H x D (mm)	380x483x227		
Weight(kg)	<35		
Operating temperature range	–25℃~+60℃		
Cooling type	Fan cooling		
Max. operation altitude	4000m		
Max. operation humidity	0-100%(No condensation)		
AC Output terminal type	Connector		
IP class	IP66		
Topology	Transformer-less		
Communication	RS485/Wifi/4G		
Display	LCD		
Certification & Standard	EN/IEC62109-1/2 ; IEC/EN61000-6-2;IEC/EN61000-6-4;IEC61683;IEC60068;IEC60529;IEC62116;IEC61727;EN50549-1; AS 4777.2;VDE-AR-N-4105;VDE 0126-1-1;CEI0-21;G98;G99;C10/C11;NB/T32004-2018 ; GB/T19964-2012		

* Specifications subject to change without prior notice.

LED4LED info@led4led.com www.led4led.com
Fotovoltaico
Solar panels

FOTOVOLTAICO

FT94930P

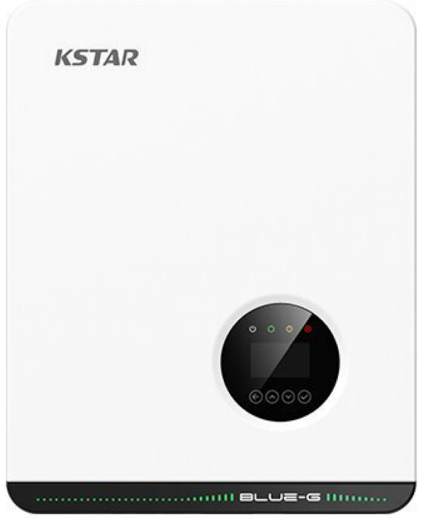

Numero di catalogo	FT94930P
Product type	Inverter
IP	66
Display	LCD
Garanzia	5 Years

MODEL		SKU:9492 KSG-30KT	SKU:9493 KSG-40KT
Input(DC)			
Max. remonmmended PV power		45000W	60000W
Max. DC voltage		1100V	1100V
Nominal voltage		600V	600V
Start voltage		180V	180V
MPPT voltage range		200 V~1,000V	200 V~1,000V
Number of MPPT tracker		3	3
Strings per MPPT tracker		2	2
Max. input current per MPPT		30A	30A
Max. short-circuit current per MPPT		50A	50A
Output(AC)			
Nominal AC output power		30000W	40000W
Maximum AC output power		33000VA	44000VA
Nominal AC voltage	400V 3L+N		
AC grid frequency range	50 / 60Hz(±5Hz)		
Maximum output current		47.7A	63.6A
Power factor(Φ)	0.8leading-0.8lagging		
THDi	3%		
Efficiency			
Max. efficiency		98.7%	98.7%
Euro efficiency		98.4%	98.4%
Protection devices			
DC switch	Yes		
Output over current	Yes		
Anti-islanding protection	Yes		
DC reverse polarity protection	Yes		
String fault Detection	Yes		
AC/DC surge protection	Type II		
Insulation detection	Yes		
AC short circuit protection	Yes		
General Specifications			
Dimensions W x H x D (mm)	380x483x227		
Weight(kg)	<35		
Operating temperature range	-25℃~+60℃		
Cooling type	Fan cooling		
Max. operation altitude	4000m		
Max. operation humidity	0-100%(No condensation)		
AC Output terminal type	Connector		
IP class	IP66		
Topology	Transformer-less		
Communication	RS485/Wifi/4G		
Display	LCD		
Certification & Standard	EN/IEC62109-1/2 ; IEC/EN61000-6-2;IEC/EN61000-6-4;IEC61683;IEC60068;IEC60529;IEC62116;IEC61727;EN50549-1; AS 4777.2;VDE-AR-N-4105;VDE 0126-1-1;CEI0-21;G98;G99;C10/C11;NB/T32004-2018 ; GB/T19964-2012		

* Specifications subject to change without prior notice.

LED4LED info@led4led.com www.led4led.com
Fotovoltaico
Solar panels

FOTOVOLTAICO

FT9494OP

Numero di catalogo	FT9494OP
Product type	Inverter
IP	66
	LCD
Garanzia	5 Years

SKU:9494

MODEL	KSG-120CL
Input(DC)	
Max. DC voltage	1100V
Nominal voltage	620V
Min./Startup voltage	250V
MPPT voltage range	200V-1000V
MPPT voltage range at full load	550V-850V
Number of MPPT	10
No. of Strings per MPPT	2
Number of strings input	20
Max. input current per MPPT	30A
Max. short-circuit current per MPPT	50A
Output(AC)	
Nominal AC output power	120kW@30℃ / 110kW@40℃ / 100kW@50℃
Max. AC apparent power	121kVA
Max. AC output power	121kW
Nominal AC voltage	320-480Vac / 3W+PE / 3W+N+PE
AC grid frequency range	45-55Hz / 55-65Hz
Rated output current	158.8A
Max. output current	174.6A
Power factor (cos Φ)	0.8leading-0.8lagging
THDi	<3%
Efficiency	
Max. efficiency	98.7%
Euro efficiency	98.3%
Protection devices	
DC switch	Yes
Anti-islanding protection	Yes
Output over current	Yes
DC reverse polarity protection	Yes
String fault Detection	Yes
AC/DC surge protection	Yes
Insulation detection	Yes
AC leakage current fault protection	Yes
I/V Curve scanning	Yes
Anti-PID function	Optional
General Specifications	
Dimensions W x H x D (mm)	1055*700*336
Weight(kg)	93
Operating temperature range	–25℃~+60℃
Cooling type	Fan cooling
Max. operation altitude	4000m（>3000m derating）
Max. operation humidity	0~100%
Night power consumption	<10W
IP class	IP66
Topology	Transformerless
Communication	RS485 /Bluetooth+APP
Display	LED
Certification & Standard	EN/IEC62109-1；EN/IEC62109-2；IEC/EN61000-6-2;IEC/EN61000-6-4;IEC/EN61000-3-11;IEC/EN61000-3-12; IEC61683;IEC60068;IEC60529;IEC62116;IEC61727;EN50549-1;EN50549-2;NB/T32004-2018；GB/T19964-2012

Specifications subject to change without prior notice.

Fotovoltaico
Solar panels

FOTOVOLTAICO

FT9481OP

Numero di catalogo	FT9481OP
Product type	Inverter
IP	66
Temperatura	-30°C/ +60°C

SPECIFICATION

	SKU:9481	SKU:9482
	XG8KTR	XG10KTR
Input (DC)		
Max. Input Power	12.8kW	16kW
Max. Input Voltage	1100V	
Start Voltage	160V	
Rated Input Voltage	600V	
Full-load MPP Voltage Range	320V ~ 850V	450V ~ 850V
MPPT Voltage Range	180V ~ 1000V	
Number of MPP Trackers	2	
Number of String per MPPT	1 / 1	
Max. Current per MPPT	14A / 14A	
Max. Short Circuit Current per MPPT	18A / 18A	
Output (AC)		
Max. Output Current	12.8A	15.9A
Rated Output Power	8kW	10kW
Max. Output Power	8.8kVA	11kVA
Rated Grid Frequency	50Hz / 60Hz	
Rated Grid Voltage	230Vac / 400Vac, 3L / N / PE	
Power Factor	>0.99 (0.8 leading~0.8 lagging)	
THDi	<3% (Rated Power)	
Efficiency		
Max. Efficiency	98.70%	
European Efficiency	98.50%	
MPPT Efficiency	99.90%	
Protection		
DC reverse polarity protection	Yes	
Anti-islanding protection	Yes	
AC short circuit protection	Yes	
Residual current monitoring unit	Yes	
Insulation resistance monitoring	Yes	
Ground fault monitoring	Yes	
Grid monitoring	Yes	
Surge protection	Type II	
AFCI protection	Optional	
Communication		
Display	LED / LCD / WiFi+App	
Communication	Standard: RS485 Optional: WiFi / GPRS / Ethernet	
Standard Compliance		
Grid Connection Standards	IEC 61727, IEC 62116, IEC 60068, IEC 61683, VDE-AR-N 4110:2018, VDE-AR-N 4105:2018, VDE-AR-N 4120:2018, EN 50549, AS/NZS 4777.2:2020, CEI 0-21, VDE 0126-1-1/A1 VFR 2014, UTE C15-712-1:2013, DEWA DRRG, NRS 097-2-1, MEA/PEA, C10/11, G98/G99	
Safety / EMC	IEC 62109-1:2010, IEC 62109-2:2011, EN 61000-6-2:2005, EN 61000-6-3:2007/A1:2011	
General Data		
Dimensions (W x H x D)	481 x 395 x 195 mm	
Weight	13.5kg	
Operating Temperature Range	-30° C ~ +60° C	
Cooling Method	Natural	
Protection Degree	IP66	
Max. Operating Altitude	4000m	
Relative Humidity	0 ~ 100%	
Topology	Transformerless	
Night Power Consumption	<1W	

LED4LED info@led4led.com www.led4led.com
Fotovoltaico
Solar panels

FOTOVOLTAICO

FT9482OP

Numero di catalogo	FT9482OP
Product type	Inverter
IP	66
Temperatura	-30°C/ +60°C

SPECIFICATION

	SKU:9481	SKU:9482
	XG8KTR	XG10KTR
Input (DC)		
Max. Input Power	12.8kW	16kW
Max. Input Voltage	1100V	
Start Voltage	160V	
Rated Input Voltage	600V	
Full-load MPP Voltage Range	320V ~ 850V	450V ~ 850V
MPPT Voltage Range	180V ~ 1000V	
Number of MPP Trackers	2	
Number of String per MPPT	1 / 1	
Max. Current per MPPT	14A / 14A	
Max. Short Circuit Current per MPPT	18A / 18A	
Output (AC)		
Max. Output Current	12.8A	15.9A
Rated Output Power	8kW	10kW
Max. Output Power	8.8kVA	11kVA
Rated Grid Frequency	50Hz / 60Hz	
Rated Grid Voltage	230Vac / 400Vac, 3L / N / PE	
Power Factor	>0.99 (0.8 leading~0.8 lagging)	
THDi	<3% (Rated Power)	
Efficiency		
Max. Efficiency	98.70%	
European Efficiency	98.50%	
MPPT Efficiency	99.90%	
Protection		
DC reverse polarity protection	Yes	
Anti-islanding protection	Yes	
AC short circuit protection	Yes	
Residual current monitoring unit	Yes	
Insulation resistance monitoring	Yes	
Ground fault monitoring	Yes	
Grid monitoring	Yes	
Surge protection	Type II	
AFCI protection	Optional	
Communication		
Display	LED / LCD / WiFi+App	
Communication	Standard: RS485 Optional: WiFi / GPRS / Ethernet	
Standard Compliance		
Grid Connection Standards	IEC 61727, IEC 62116, IEC 60068, IEC 61683, VDE-AR-N 4110:2018, VDE-AR-N 4105:2018, VDE-AR-N 4120:2018, EN 50549, AS/NZS 4777.2:2020, CEI 0-21, VDE 0126-1-1/A1 VFR 2014, UTE C15-712-1:2013, DEWA DRRG, NRS 097-2-1, MEA/PEA, C10/11, G98/G99	
Safety / EMC	IEC 62109-1:2010, IEC 62109-2:2011, EN 61000-6-2:2005, EN 61000-6-3:2007/A1:2011	
General Data		
Dimensions (W x H x D)	481 x 395 x 195 mm	
Weight	13.5kg	
Operating Temperature Range	-30° C ~ +60° C	
Cooling Method	Natural	
Protection Degree	IP66	
Max. Operating Altitude	4000m	
Relative Humidity	0 ~ 100%	
Topology	Transformerless	
Night Power Consumption	<1W	

LED4LED info@led4led.com www.led4led.com
Fotovoltaico
Solar panels

FOTOVOLTAICO

FT94830P

Numero di catalogo	FT94830P
Product type	Inverter
IP	66
Temperatura	-30°C/ +60°C

SPECIFICATION

SKU:9483

	XG30KTR
Input (DC)	
Max. Input Power	48 kW
Max. Input Voltage	1100 V
Start Voltage	250 V
Rated Input Voltage	600 V
Full-load MPP Voltage Range	500 V ~ 800 V
MPPT Voltage Range	200 V ~ 1000 V
Number of MPP Trackers	3
String per MPPT	2
Max. Current per MPPT	26 A
Max. Short Circuit Current per MPPT	32 A
Output (AC)	
Max. Output Current	48.3 A
Rated Output Power	30 kW
Max. Output Power	33.3 kVA
Rated Grid Frequency	50 Hz / 60 Hz
Rated Grid Voltage	230Vac / 400Vac, 3L / N / PE
Power Factor	>0.99 (0.8 leading~0.8 lagging)
THDi	<3% (Rated Power)
Efficiency	
Max. Efficiency	98.60%
European Efficiency	98.50%
MPPT Efficiency	99.90%
Protection	
DC reverse polarity protection	Yes
Anti-islanding protection	Yes
AC short circuit protection	Yes
Residual current monitoring unit	Yes
Insulation resistance monitoring	Yes
Ground fault monitoring	Yes
Grid monitoring	Yes
PV string monitoring	Yes
Surge protection	Type II
AFCI protection	Optional
Communication	
Display	LED / LCD / WiFi+App
Communication	Standard：RS485 Optional：WiFi / GPRS / Ethernet
Standard Compliance	
Grid Connection Standards	IEC 61727, IEC 62116, IEC 60068, IEC 61683, VDE-AR-N 4110:2018, VDE-AR-N 4105:2018, VDE-AR-N 4120:2018, EN 50549, AS/NZS 4777.2:2020, CEI 0-21, VDE 0126-1-1/A1 VFR 2014, UTE C15-712-1:2013, DEWA DRRG, NRS 097-2-1, MEA/PEA, C10/11, G98/G99
Safety / EMC	IEC 62109-1:2010, IEC 62109-2:2011, EN 61000-6-2:2005, EN 61000-6-3:2007/A1:2011
General Data	
Dimensions (W x H x D)	600 x 430 x 230 mm
Weight	30 kg
Operating Temperature Range	-30° C ~ +60° C
Cooling Method	Smart Cooling
Protection Degree	IP66
Max. Operating Altitude	4000 m
Relative Humidity	0 ~ 100%
Topology	Transformerless
Night Power Consumption	< 1 W

LED4LED info@led4led.com www.led4led.com
Fotovoltaico
Solar panels

FOTOVOLTAICO

FT9484OP

Numero di catalogo	FT9484OP
Product type	Inverter
IP	66
Temperatura	-30°C/ +60°C

SPECIFICATION

	XG50KTR
Input (DC)	
Max. Input Power	80kW
Max. Input Voltage	1100V
Start Voltage	250V
Rated Input Voltage	600V
Full-load MPP Voltage Range	520V ~ 850V
MPPT Voltage Range	200V ~ 1000V
Number of MPP Trackers	4
Number of string per MPPT	3 / 2 / 3 / 2
Max. Current per MPPT	39A / 26A / 39A / 26A
Max. Short Circuit Current per MPPT	48A / 32A / 48A / 32A
Output (AC)	
Max. Output Current	79.7A
Rated Output Power	50kW
Max. Output Power	55kVA
Rated Grid Frequency	
Rated Grid Voltage	230Vac / 400Vac
Power Factor	>0.99 (0.8 leading~0.8 lagging)
THDi	<3% (Rated Power)
Efficiency	
Max. Efficiency	98.70%
European Efficiency	98.40%
MPPT Efficiency	99.90%
Protection	
DC reverse polarity protection	Yes
Anti-islanding protection	Yes
AC short circuit protection	Yes
Residual current monitoring unit	Yes
Insulation resistance monitoring	Yes
Ground fault monitoring	Yes
Grid monitoring	Yes
PV string monitoring	Yes
Surge protection	Type II
AFCI protection	Optional
Communication	
Display	LED / LCD / WiFi+App
Communication	Standard：RS485 Optional：WiFi / GPRS / Ethernet
Standard Compliance	
Grid Connection Standards	IEC 61727, IEC 62116, IEC 60068, IEC 61683, VDE-AR-N 4110:2018, VDE-AR-N 4105:2018, VDE-AR-N 4120:2018, EN 50549, AS/NZS 4777.2:2020, CEI 0-21, VDE 0126-1-1/A1 VFR 2014, UTE C15-712-1:2013, DEWA DRRG, NRS 097-2-1, MEA/PEA, C10/11, G98/G99
Safety / EMC	IEC 62109-1:2010, IEC 62109-2:2011, EN 61000-6-2:2005, EN 61000-6-3:2007/A1:2011
General Data	
Dimensions (W x H x D)	650 x 450 x 260 mm
Weight	50kg
Operating Temperature Range	-30° C ~ +60° C
Cooling Method	Smart Cooling
Protection Degree	IP66
Max. Operating Altitude	4000m
Relative Humidity	0 ~ 100%
Topology	Transformerless
Night Power Consumption	<1W

LED4LED info@led4led.com www.led4led.com
Fotovoltaico
Solar panels

FOTOVOLTAICO

FT9485OP

Numero di catalogo	FT9485OP
Product type	Inverter
IP	66
Temperatura	-30°C/ +60°C

SPECIFICATION

SKU:9485

	XG100KTR
Input (DC)	
Max. Input Power	150kW
Max. Input Voltage	1100V
Start Voltage	250V
Rated Input Voltage	620V
Full-load MPP Voltage Range	530V ~ 850V
MPPT Voltage Range	180V ~ 1000V
Number of MPP Trackers	9
String per MPPT	2
Max. Current per MPPT	26A
Max. Short Circuit Current per MPPT	40A
Output (AC)	
Max. Output Current	158.8A
Rated Output Power	100kW
Max. Output Power	110kVA
Rated Grid Frequency	50Hz / 60Hz
Rated Grid Voltage	230Vac / 400Vac, 3L / N / PE, 3L / PE
Power Factor	>0.99 (0.8 leading~0.8 lagging)
THDi	<3% (Rated Power)
Efficiency	
Max. Efficiency	98.70%
European Efficiency	98.50%
MPPT Efficiency	99.90%
Protection	
DC reverse polarity protection	Yes
Anti-islanding protection	Yes
AC short circuit protection	Yes
Residual current monitoring unit	Yes
Insulation resistance monitoring	Yes
Ground fault monitoring	Yes
Grid monitoring	Yes
PV string monitoring	Yes
Surge protection	Type II
AFCI protection	Optional
PID recovery function	Optional
SVG function	Optional
Communication	
Display	LED / LCD / WiFi+App
Communication	Standard：RS485 Optional：WiFi / DRM / Bluetooth
Standard Compliance	
Grid Connection Standards	IEC 61727, IEC 62116, IEC 60068, IEC 61683, VDE-AR-N 4110:2018, VDE-AR-N 4105:2018, VDE-AR-N 4120:2018, EN 50549, AS/NZS 4777.2:2020, CEI 0-21, VDE 0126-1-1/A1 VFR 2014, UTE C15-712-1:2013, DEWA DRRG, NRS 097-2-1, MEA/PEA, C10/11, G98/G99
Safety / EMC	IEC 62109-1:2010, IEC 62109-2:2011, EN 61000-6-2:2005, EN 61000-6-3:2007/A1:2011
General Data	
Dimensions (W x H x D)	1050 x 660 x 330 mm
Weight	95kg / 98kg / 101kg
Operating Temperature Range	-30° C ~ +60° C
Cooling Method	Smart Cooling
Protection Degree	IP66
Max. Operating Altitude	4000m
Relative Humidity	0 ~ 100%
Topology	Transformerless
Night Power Consumption	<1W

Fotovoltaico
Solar panels

FOTOVOLTAICO

FT9471OP

Numero di catalogo	FT9471OP
Nominal Capacity	228 Ah
Nominal Energy	10.94 kWh
Nominal Voltage	48 Vdc
Nominal Charge/Discharge Current	150 A
	BYD
IP	65
Weight	90 kg.
Temperatura	-20°C/ +40°C
Garanzia	5 Years

● Discharge characteristics (25°C)

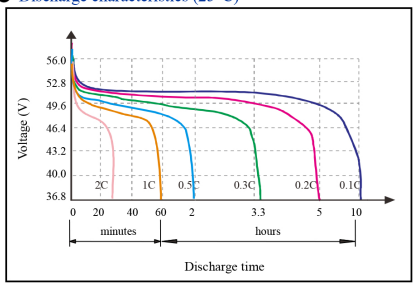

● Temperature affect on discharge characteristics (0.5C)

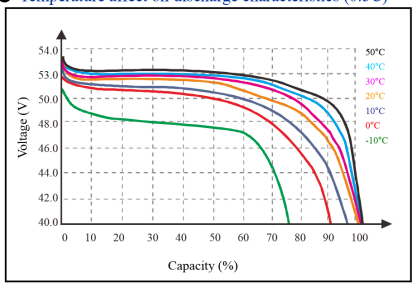

● State of Charge Curve (25°C)

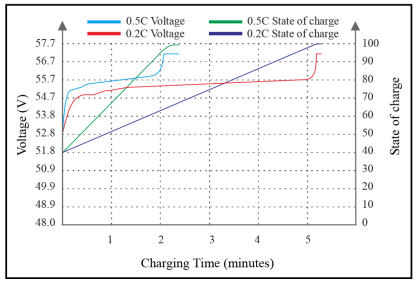

● Charge characteristics (25°C)

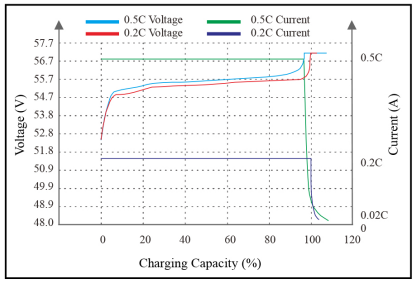

● Cycle life on D.O.D (25°C)

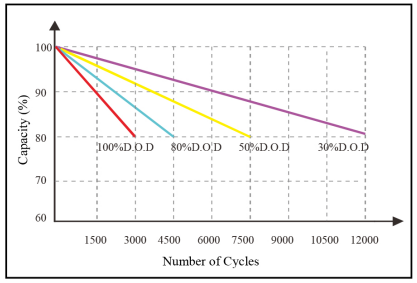

● Self Discharge Characteristics Curve

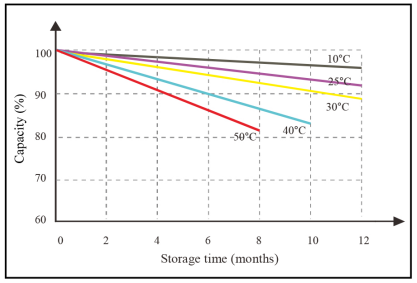

Note 2: The above curves are based on laboratory testing data @ 25°C 40%RH.

info@led4led.com www.led4led.com
Fotovoltaico
Solar panels

FOTOVOLTAICO

FT9472OP

Numero di catalogo	FT9472OP
Weight	90 kg
Garanzia	10 years
Nominal Capacity	200 Ah
Nominal Energy	10.24 kWh
Nominal Voltage	51.2Vdc
Nominal Charge/Discharge Current	150 A
	EVE
IP	65

● Discharge characteristics (25°C)

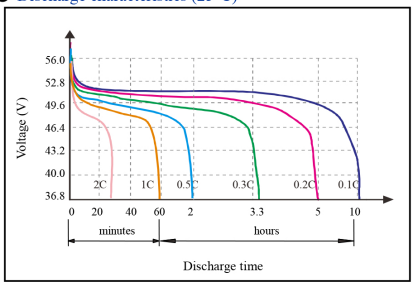

● Temperature affect on discharge characteristics (0.5C)

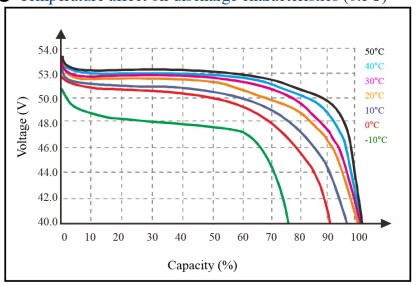

● State of Charge Curve (25°C)

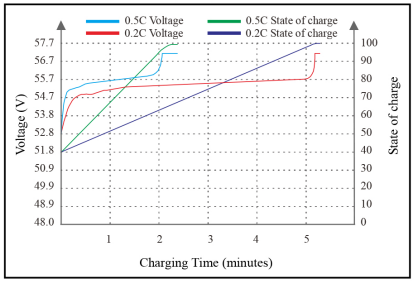

● Charge characteristics (25°C)

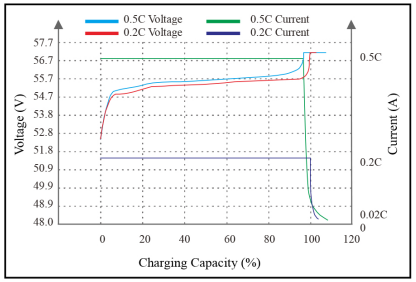

● Cycle life on D.O.D (25°C)

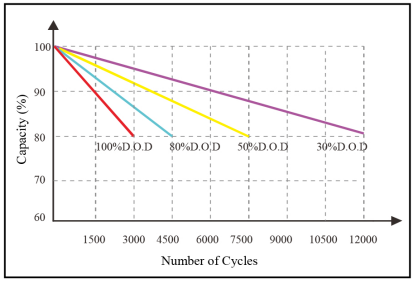

● Self Discharge Characteristics Curve

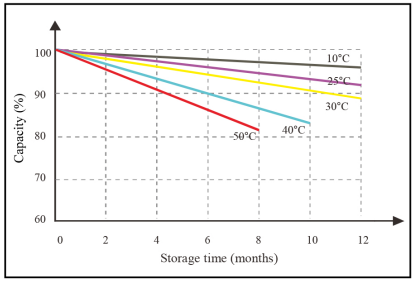

Note 2: The above curves are based on laboratory testing data @ 25°C 40%RH.

info@led4led.com
www.led4led.com
Fotovoltaico
Solar panels

FOTOVOLTAICO

FT9473OP

Numero di catalogo	FT9473OP
Nominal Capacity	100 Ah
Nominal Energy	5.12 kWh
Nominal Voltage	51.2Vdc
Nominal Charge/Discharge Current	100 A
	EVE
IP	65
Weight	42.2 kg
Garanzia	10 years

● Discharge characteristics (25°C)

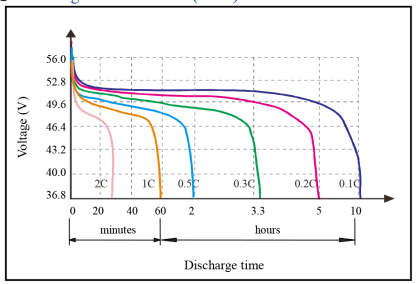

● Temperature affect on discharge characteristics (0.5C)

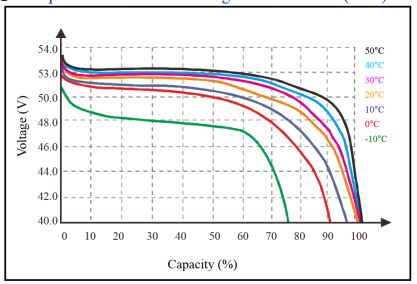

● State of Charge Curve (25°C)

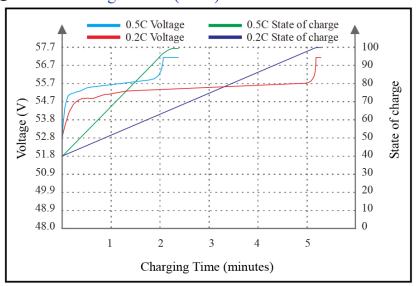

● Charge characteristics (25°C)

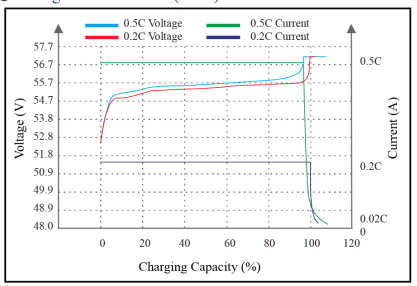

● Cycle life on D.O.D (25°C)

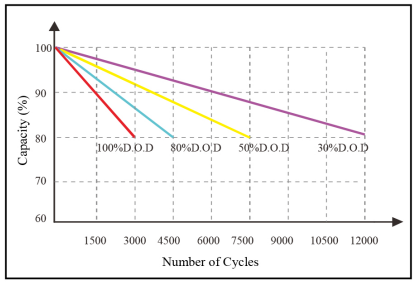

● Self Discharge Characteristics Curve

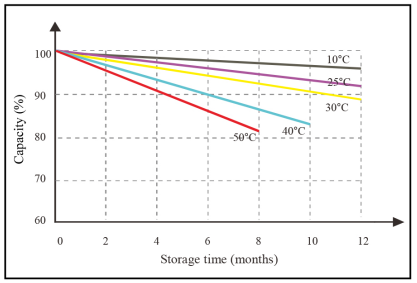

Fotovoltaico
Solar panels

FOTOVOLTAICO

FT9458OP

Numero di catalogo	FT9458OP
Codice Prodotto	OT1-C2
Colore	Black
Voltaggio	1500V 30A
Garanzia	5 Years

Product specifications	
Item	Single solar panel cleaning robot 2384mm 150W 24V 10Ah
SKU	9658
N.Weight/KG	40

Packing list
Cleaning Robot
Charger for Remote Controller
Remote Controller
Brochure(EN)
Running Switch
Charger for Battery
Lithium Battery

General Parameters	
PV Module Length Range (mm)	2384MM Single PV Panel
Obstacle Crossing Ability (mm)	20
Traveling Distance(m)	one-way travel distance 2280~3600
Traveling Speed(m/min)	15-20
Generator Power(W)	150W
Width of Machine(mm)	365
Height of Machine(mm)	280
Water Used Per Hour	330L/H(0.3mpa)
Working Time(Hours)	4- 5 Hours
Solar Panel(W)	27W
Battery Capacity(Ah)	24V/10Ah
Brush Life(Years)	2-3 Years
Applicable Temperature (℃)	-10℃(unfrozen)~ 50℃
Cleaning Mode	Dry/Watering Cleaning
Cleaning Way	One Time/Repeated Time/Positioning/Schedule
Other Functions	Speed Adjust/Direction Adjust
Optional Configuration	Packing Bay Frame
	WiFi Module/4G Module

Product Features	
Automatic adjustment	Automatic correction and adjustment during running, to prevent machine deviation and jamming.
Stronger obstacle crossing ability	Include slope, step and misalignment.
Excellent running property	Work with lithium battery and brushless motor, more durable.
High efficient cleaning	360° rolling brush,one day can clean 1.2MWp.
Auto start and stop	Full automatic remote control of running and back to docking station.
Integrated dry and watering clean	To meet different cleaning requirement of different solar power plants.
Competitive Cost	Quick money return by increasing the electricity production.

LED4LED info@led4led.com www.led4led.com
Fotovoltaico
Solar panels

FOTOVOLTAICO

FT9659OP

Numero di catalogo	FT9659OP
Potenza	200W
Batteria	24V/20Ah
durata del funzionamento del prodotto	4-5 Hours
Velocità di pulizia	15-20 m/min
Modalità di pulizia	Dry Cleaning
Weight of Product	81kg
Temperatura	-10°C/ +50°C
Garanzia	2 Years

Product specifications	
Item	Double Solar Panel Cleaning Robot 2384mm 200W 24V 20Ah
SKU	9659
N.Weight/KG	81

Packing list
Cleaning Robot
Charger for Remote Controller
Remote Controller
Brochure(EN)
Running Switch
Charger for Battery
Lithium Battery

General Parameters	
PV Module Length Range (mm)	2384MM Double PV Panel
Obstacle Crossing Ability (mm)	20
Traveling Distance(m)	Double-board robot one-way travel distance 2280~3600
Traveling Speed(m/min)	15-20
Generator Power(W)	200W
Width of Machine(mm)	365
Height of Machine(mm)	280
Water Used Per Hour	330L/H(0.3mpa)
Working Time(Hours)	4- 5 Hours
Solar Panel(W)	27W
Battery Capacity(Ah)	24V/20Ah
Brush Life(Years)	2-3 Years
Applicable Temperature (℃)	-10℃(unfrozen)~ 50℃
Cleaning Mode	Dry/Watering Cleaning
Cleaning Way	One Time/Repeated Time/Positioning/Schedule
Other Functions	Speed Adjust/Direction Adjust
Optional Configuration	Packing Bay Frame
	WiFi Module/4G Module

Product Features	
Automatic adjustment	Automatic correction and adjustment during running, to prevent machine deviation and jamming.
Stronger obstacle crossing ability	Include slope, step and misalignment.
Excellent running property	Work with lithium battery and brushless motor, more durable.
High efficient cleaning	360° rolling brush,one day can clean 1.2MWp.
Auto start and stop	Full automatic remote control of running and back to docking station.
Integrated dry and watering clean	To meet different cleaning requirement of different solar power plants.
Competitive Cost	Quick money return by increasing the electricity production.

LED4LED info@led4led.com www.led4led.com
Fotovoltaico
Solar panels

FOTOVOLTAICO

FT9456OP

Numero di catalogo	FT9456OP
Codice Prodotto	OT1-C2
Colore	Black
Voltaggio	1500V 30A
Garanzia	5 Years

Product specifications	
Item	Double Headed Electric Photovoltaic Brush 5.5 Glass Fiber Handle 220V or 110V AC
SKU	9656
Telescopic rod/m.	5.5
N.Weight/KG	10

Packing list
Water pipe and accessories*1
Backpack*1
Power cable*1
Push button switch spring wire*1
Telescopic rod*1
Brush head assembly * 1 set (including 2 pcs brush discs)

General Parameters		
Drive motor	Applicable voltage	110-240V
	Utilization voltage	24V
	Power	52.8W*2
	Speed	128rpm
	Torsion	1.2N.m
Handle	Telescopic material	Aluminum alloy/Carbon fiber
	Wall thickness	1mm-1.2mm
	Diameter	43mm
	Length	5.5m
Brush	Diamneter	280mm
	color	Red and blue
	Material	Nylon
	Number of bristle circles	Four or eight
Shell	color	Blue, green

Product Features	
Easy to carry	No need to carry batteries
Save manpower	Special buoyancy design, makes it light when working
Customization	The length of the water supply pipe can be customized
Suitable for the angle of the solar panel	The angle of the brush head fits the solar panel, which can be adjusted with the angle of the solar panel.
Adjustable length	The shorter the pole, the lighter it is, the telescopic pole can be adjusted in length
Excellent bristle design	The bristles are moderately soft and hard, and do not harm the photovoltaic panel

info@led4led.com www.led4led.com
Fotovoltaico
Solar panels

FOTOVOLTAICO

FT9457OP

Numero di catalogo	FT9457OP
Codice Prodotto	OT1-C2
Colore	Black
Voltaggio	1500V 30A
Garanzia	5 Years

Product specifications	
Item	Double Headed Electric Photovoltaic Brush 5.5 Glass Fiber Handle 220V or 110V AC + DC24 Supply (Battery)
SKU	9657
Telescopic rod/m.	5.5
N.Weight/KG	14.9

Packing list
Battery *1
Water pipe and accessories*1
Backpack*1
Power cable*1
Push button switch spring wire*1
Telescopic rod*1
Brush head assembly * 1 set (including 2 pcs brush discs)

General Parameters		
Drive motor	Applicable voltage	110-240V
	Utilization voltage	24V
	Power	52.8W*2
	Speed	128rpm
	Torsion	1.2N.m
Handle	Telescopic material	Aluminum alloy/Carbon fiber
	Wall thickness	1mm-1.2mm
	Diameter	43mm
	Length	1.5-3.5m / 1.7-5.5m / 1.9-7.5m(Optional)
Brush	Diamneter	280mm
	color	Red and blue or black
	Material	Nylon
	Number of bristle circles	Four or eight
Shell	color	Blue, yellow, green

Product Features	
Easy to carry	Lithium battery is carried in a backpack, no need to carry batteries
Save manpower	Special buoyancy design, makes it light when working
Customization	The length of the water supply pipe can be customized
Suitable for the angle of the solar panel	The angle of the brush head fits the solar panel, which can be adjusted with the angle of the solar panel.
Battery life	The battery can be used continuously for 5-6 hours
Adjustable length	The shorter the pole, the lighter it is, the telescopic pole can be adjusted in length
Excellent bristle design	The bristles are moderately soft and hard, and do not harm the photovoltaic panel

LED4LED info@led4led.com www.led4led.com
Fotovoltaico
Solar panels

FOTOVOLTAICO

FT9461OP

Numero di catalogo	FT9461OP
	kWh, kVarh, W, Var, VA, PF ,Hz ,dmd ,V ,A
	Yes
Nominal Voltage	120V or 230V ac
	10A
	100A
Garanzia	3 Years

Specification	
Nominal voltage(Un)	120V or 230V ac
Operational voltage	80%~120% of Un
Insulation capabilities	
- AC voltage withstand	4KV for 1 minute
- Impulse voltage withstand	6KV-1.2μS
Basic current (Ib)	10A
Maximum rated current (Imax)	100A
Operational current range	0.4% Ib-Imax
Over current withstand	30 Imax for 0.01s
Operational frequency range	50 or 60Hz
Internal power consumption	≤ 2W/10VA
Pulse output 1	Configurable
Pulse output 2	1000imp/kWh
Max reading	999999.9 kWh/kVarh

Performance criteria	
Operating humidity	≤ 90%
Storage humidity	≤ 95%
Operating temperature	-25℃ - +55℃
Storage temperature	-40℃ - +70℃
Reference temperature	23℃± 2℃
International standard	IEC 62053-21 / IEC620532-22 / EN50470-1/3
Accuracy class	Class1/Class0.5S/Class B
Installation category	CAT II
Mechanical environment	M1
Electromagnetic environment	E2
Degree of pollution	2
Protection against penetration of dust and water	IP51(indoor)
Insulating encased meter of protective class	II
Electrostatic discharges	8kV contact / 15kV air gap
Electromagnetic HF fields	IEC 61000-4-3
Electrical fast transients	4kV
Surge	4kV
Radiated & conducted emissions	EN 55022

Accuracy	
Voltage,Current	0.5%
Frequency	0.2% of mid-frequency
Power factor	1% of unity (0.01)
Active power , Apparent power	±1% of range maximum
Reactive power	±1% of range maximum
Reactive energy(Varh)	Class 2
Active energy (Wh)	Class 1/Class0.5s

Modbus	
Bus type	RS485(semi-duplex)
Protocol	Modbus RTU
Baud rate	1200/2400/4800/9600bps/19200(optional)bps
Address range	1-247
Max. Bus loading	64pcs
Communication distance	1000M
Parity	EVEN/ODD/NONE
Data bit	8
Stop bit	1

M-bus	
Bus type	M-bus
Protocol	EN13757-3
Baud rate	600/1200/2400/4800/9600/19200(optional)bps
Parity	NONE/EVEN/ODD
Stop bits	1 or 2
Primary Address	1 to 250
Secondary Address	00 00 00 01 to 99 99 99 99

Pulse Output	
Pulse outputs	2
Pulse output type	Passive
Pulse Output 1	Configurable
Pulse width	200/100(default)/60ms
Pulse output 2	1000imp/kWh

Wiring diagram

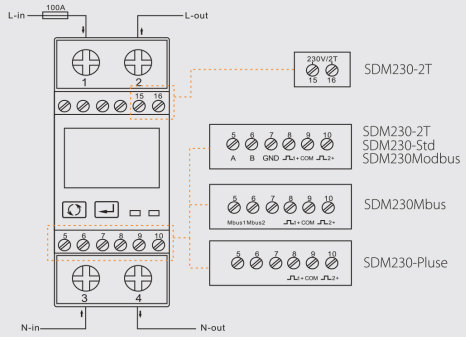

Dimensions

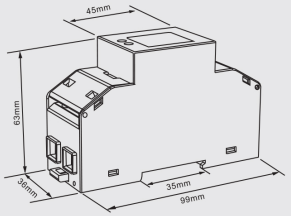

Height	99mm
Width	36mm
Depth	63mm

info@led4led.com www.led4led.com
Fotovoltaico
Solar panels

FOTOVOLTAICO

FT9462OP

Numero di catalogo	FT9462OP
	kWh, kVarh, W, Var, VA, PF ,Hz ,dmd ,V ,A, THD
	Yes
	3x230/400V ac
	10A
	100A
	LCD
Garanzia	3 Years

Specification	
Nominal voltage(Un)	3x230/400V ac
Operational voltage	80%～120% of Un
Insulation capabilities	
- AC voltage withstand	4KV for 1 minute
- Impulse voltage withstand	6KV-1.2μS
Basic current (Ib)	10A
Maximum rated current (Imax)	100A
Operational current range	0.4% Ib-Imax
Over current withstand	30 Imax for 0.01s
Operational frequency range	50 or 60Hz
Power consumption per phase	≤ 2W/10VA
Display	LCD
Max reading	999999.99 kWh/kVarh

Performance criteria	
Operating humidity	≤ 90%
Storage humidity	≤ 95%
Operating temperature	-25℃ - +55℃
Storage temperature	-40℃ - +70℃
Reference temperature	23℃± 2℃
International standard	IEC 62053-21 / IEC 62053-22 / EN50470-1/3
Accuracy class	Class1/Class0.5S/Class B
Installation category	CAT III
Mechanical environment	M1
Electromagnetic environment	E2
Degree of pollution	2
Protection against penetration of dust and water	IP51(indoor)
Insulating encased meter of protective class	II
Electrostatic discharges	8kV contact / 15kV air gap
Electromagnetic HF fields	IEC 61000-4-3
Electrical fast transients	4kV

Multi-tariff	
time clock accuracy	< 1s/day
Tariff	4
Time segments	10

Accuracy	
Voltage,Current	0.5%
Frequency	0.2% of mid-frequency
Power factor	1% of unity (0.01)
Active power , Apparent power	±1% of range maximum
Reactive power	±1% of range maximum
Reactive energy(Varh)	Class 2
Active energy (Wh)	Class 1/Class0.5s

Modbus	
Bus type	RS485(semi-duplex)
Protocol	Modbus RTU
Baud rate	2400/4800/9600/19200/38400bps
Address range	1-247
Max. Bus loading	64pcs
Communication distance	1000M
Parity	EVEN/ODD/NONE
Data bit	8
Stop bit	1

M-bus	
Bus type	M-bus
Protocol	EN13757-3
Baud rate	600/1200/2400/4800/9600bps
Parity	NONE/EVEN/ODD
Stop bits	1 or 2
Primary Address	1 to 250
Secondary Address	00 00 00 01 to 99 99 99 99

Pulse Output	
Pulse outputs	2
Pulse output type	Passive
Pulse Output 1	Configurable
Pulse width	200/100(default)/60ms
Pulse output 2	400imp/kWh

Wiring diagram

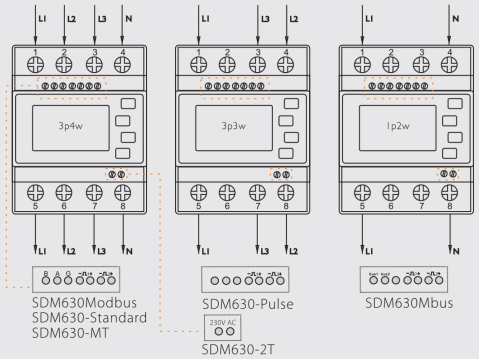

Dimensions

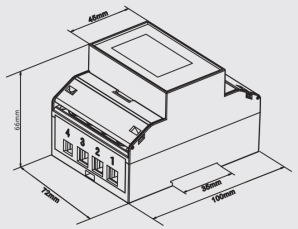

Height 100mm
Width 72mm
Depth 66mm

LED4LED info@led4led.com www.led4led.com
Fotovoltaico
Solar panels

FOTOVOLTAICO

FT9463OP

Specification	
Nominal voltage(Un)	3x230/400V ac
Operational voltage	60%～120% of Un
Insulation capabilities	
- AC voltage withstand	4KV for 1 minute
- Impulse voltage withstand	6KV-1.2μS
Rated current (Ib)	5A CT or 333mV / 100mA CT input
Operational current range	0.4% Ib-Imax
Over current withstand	20 Imax for 0.01s
Operational frequency range	50 or 60Hz
Power consumption per phase	≤ 2W/10VA
Pulse output 1	Configurable
Pulse output 2	3200 imp/kWh
Display	LCD
Max reading	9999999.9 kWh/kVarh

Performance criteria	
Operating humidity	≤ 90%
Storage humidity	≤ 95%
Operating temperature	-25°C - +55°C
Storage temperature	-40°C - +70°C
Reference temperature	23°C± 2°C
International standard	IEC 62053-21/IEC 62053-22/ EN50470-1/3
Accuracy class	Class1/Class0.5S/Class B
Installation category	CAT III
Mechanical environment	M1
Electromagnetic environment	E2
Degree of pollution	2
Protection against penetration of dust and water	IP51(indoor)
Insulating encased meter of protective class	II
Electrostatic discharges	8kV contact / 15kV air gap
Radiated & conducted emissions	EN 55022

Accuracy	
Voltage,Current	0.5%
Frequency	0.2% of mid-frequency
Power factor	1% of unity (0.01)
Active power , Apparent power	±1% of range maximum
Reactive power	±1% of range maximum
Reactive energy(Varh)	Class 2
Active energy (Wh)	Class 1/Class0.5s

Modbus	
Bus type	RS485(semi-duplex)
Protocol	Modbus RTU
Baud rate	2400/4800/9600/19200/38400bps
Address range	1-247
Max. Bus loading	64pcs
Communication distance	1000M
Parity	EVEN/ODD/NONE
Data bit	8
Stop bit	1

M-bus	
Bus type	M-bus
Protocol	EN13757-3
Baud rate	600/1200/2400/4800/9600bps
Parity	NONE/EVEN/ODD
Stop bits	1 or 2
Primary Address	1 to 250
Secondary Address	00 00 00 01 to 99 99 99 99

Numero di catalogo	FT9463OP
Garanzia	3 Years
	kWh, kVarh, W, Var, VA, PF ,Hz ,dmd ,V ,A, THD
	Yes
	3x230/400V ac
	10A

Wiring diagram

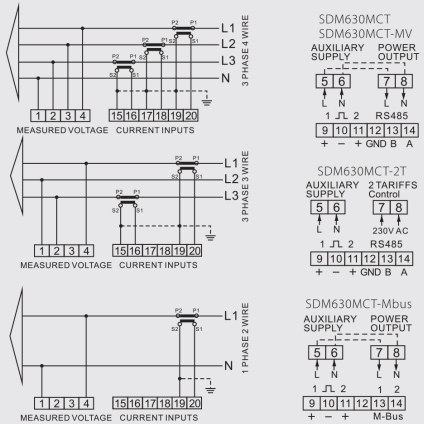

Dimensions

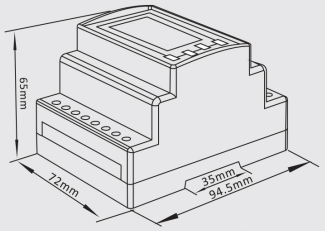

Height 94.5mm
Width 72mm
Depth 65mm

LED4LED info@led4led.com www.led4led.com
Fotovoltaico
Solar panels

FOTOVOLTAICO

FT9495OP

Numero di catalogo	FT9495OP
Potenza	1.5 W
Temperatura	-20°C/ +60°C
	External WIFI Stick Antenna
Working Voltage	DC 5-12 V
Altri	Real-time Control, Data Resuming
Dimensioni del prodotto	73x31x48mm

FOTOVOLTAICO

FT9464OP

Numero di catalogo	FT9464OP
IP	68
	600W
	60V
	16A
	18A
	1500V
Cavo	4mm²(12AWG) / 4mm²(12AWG)
	150/1050mm
Dimensioni del prodotto	103x105.3x21.3mm
Weight	0.65 kg
Temperatura	-20°C/ +60°C

FOTOVOLTAICO

FT9451OP

Numero di catalogo	FT9451OP
Codice Prodotto	OT1-C2
Colore	Black
Voltaggio	1500V DC
Dimensioni del prodotto	100M/Roll
Garanzia	5 Years

FOTOVOLTAICO

FT9453OP

Numero di catalogo	FT9453OP
Codice Prodotto	OT1-C2
Colore	Black
Voltaggio	1500V DC
Dimensioni del prodotto	100M/Roll
Garanzia	5 Years

FOTOVOLTAICO

FT9452OP

Numero di catalogo	FT9452OP
Codice Prodotto	OT1-C2
Colore	Red
Voltaggio	1500V DC
Dimensioni del prodotto	100M/Roll
Garanzia	5 Years

FOTOVOLTAICO

FT9454OP

Numero di catalogo	FT9454OP
Codice Prodotto	OT1-C2
Colore	Red
Voltaggio	1500V DC
Dimensioni del prodotto	100M/Roll
Garanzia	5 Years

FT94330P

Numero di catalogo	FT94330P
Codice Prodotto	OT1-B2
Colore	Black and Red
Dimensioni del prodotto	1.5 m

FT94320P

Numero di catalogo	FT94320P
Codice Prodotto	OT1-B2
Colore	Black
Dimensioni del prodotto	5m

FOTOVOLTAICO

FT9458OP

Numero di catalogo	FT9458OP
Codice Prodotto	OT1-C2
Colore	Black
Voltaggio	1500V 30A
Garanzia	5 Years

FOTOVOLTAICO

FT9457OP

Numero di catalogo	FT9457OP
Codice Prodotto	OT1-C2
Colore	Black
Voltaggio	1500V 30A
Garanzia	5 Years

FOTOVOLTAICO

FT9456OP

Numero di catalogo	FT9456OP
Codice Prodotto	OT1-C2
Colore	Black
Voltaggio	1500V 30A
Garanzia	5 Years

FOTOVOLTAICO

FT9455OP

Numero di catalogo	FT9455OP
Codice Prodotto	OT1-C2
Colore	Black
Voltaggio	1000V 30A
Garanzia	5 Years

FOTOVOLTAICO

FT9434OP

Numero di catalogo	FT9434OP
Colore	Black
Codice Prodotto	OT1-B2

FOTOVOLTAICO

FT9615OP

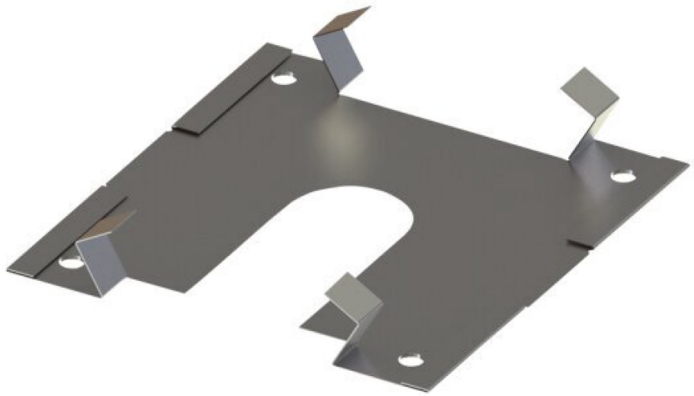

Numero di catalogo	FT9615OP
Codice Prodotto	OT1-B8

FOTOVOLTAICO

FT9603OP

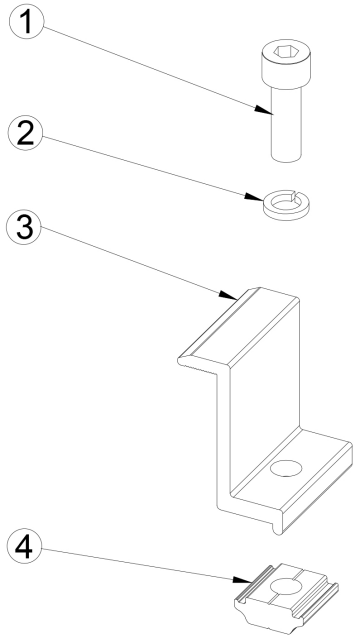

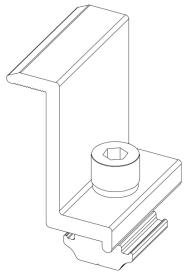

Numero di catalogo	FT9603OP
Codice Prodotto	OT1-B8

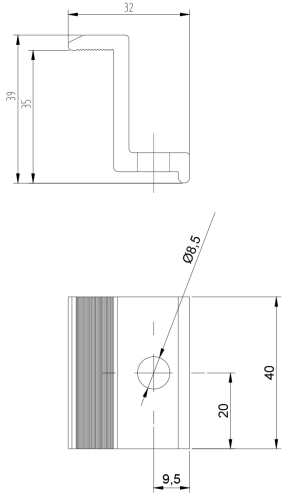

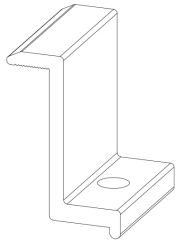

Fotovoltaico
Solar panels

FOTOVOLTAICO

FT9609OP

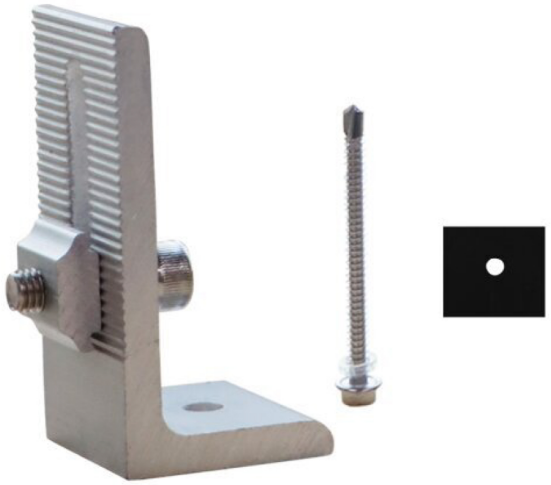

Numero di catalogo	FT9609OP
Codice Prodotto	OT1-B8

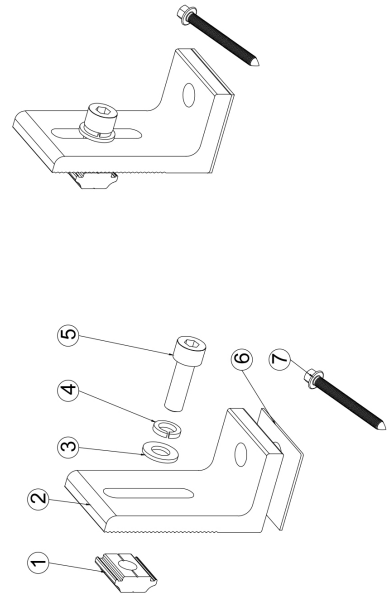

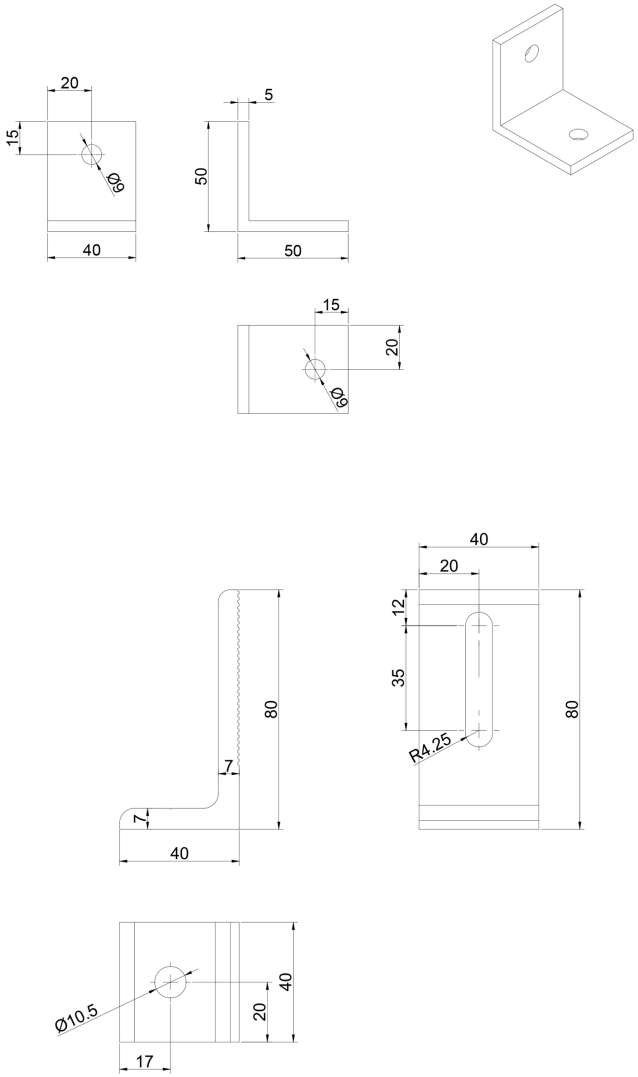

Fotovoltaico
Solar panels

FOTOVOLTAICO

FT9616OP

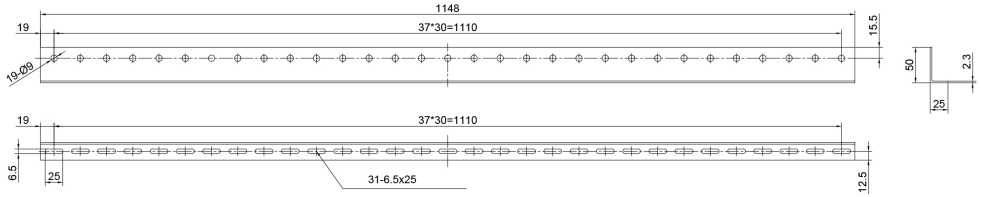

Numero di catalogo	FT9616OP
Codice Prodotto	OT1-B8

Fotovoltaico
Solar panels

FOTOVOLTAICO

FT9614OP

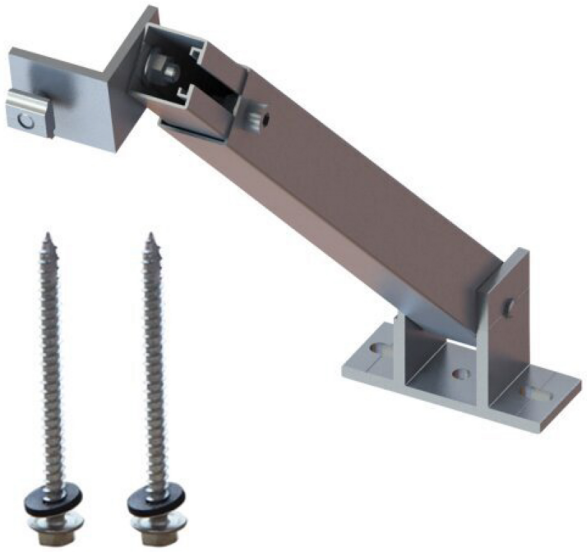

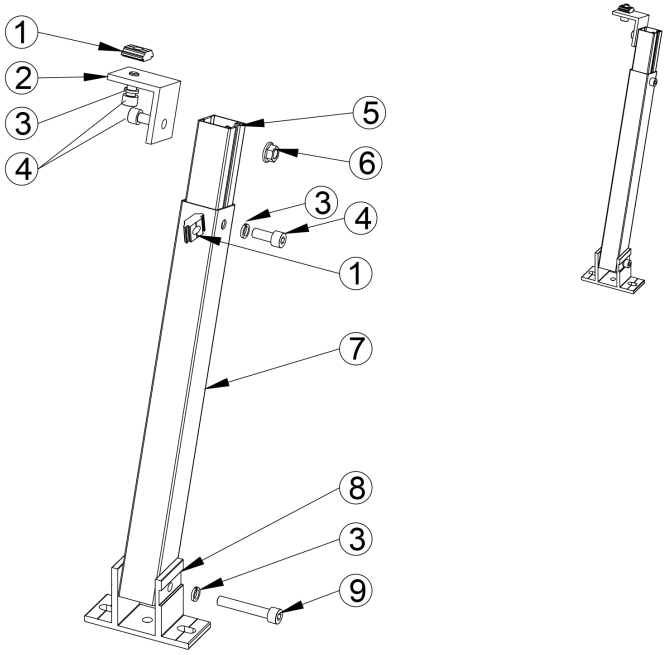

Numero di catalogo	FT9614OP
Codice Prodotto	OT1-B8

Fotovoltaico
Solar panels

FOTOVOLTAICO

FT9613OP

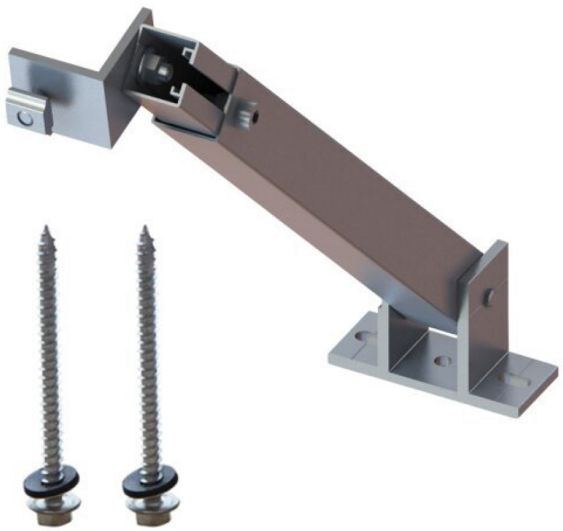

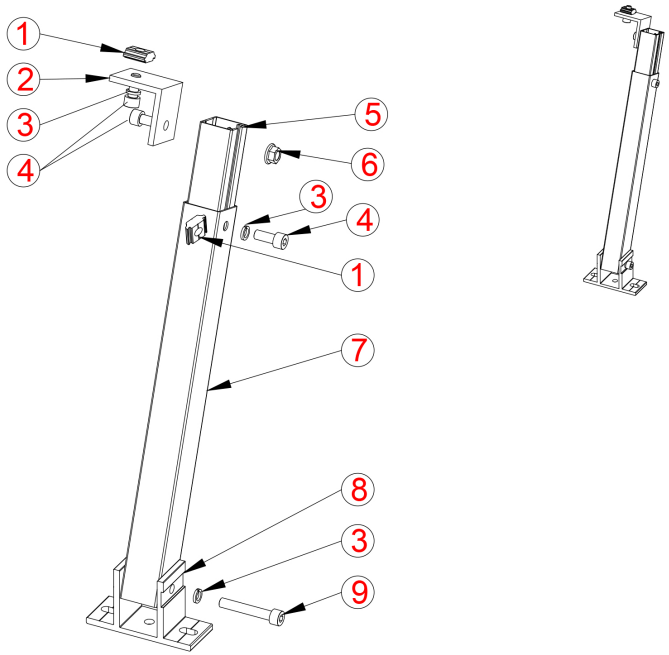

Numero di catalogo	FT9613OP
Codice Prodotto	OT1-B8

Fotovoltaico
Solar panels

FOTOVOLTAICO

FT9612OP

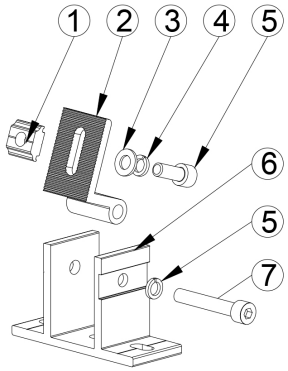

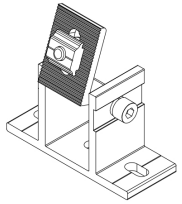

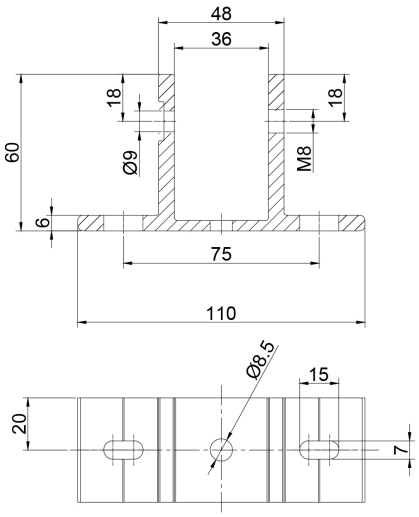

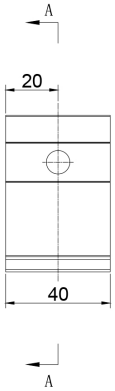

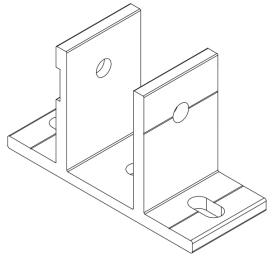

Numero di catalogo	FT9612OP
Codice Prodotto	OT1-B8

Fotovoltaico
Solar panels

FOTOVOLTAICO

FT9611OP

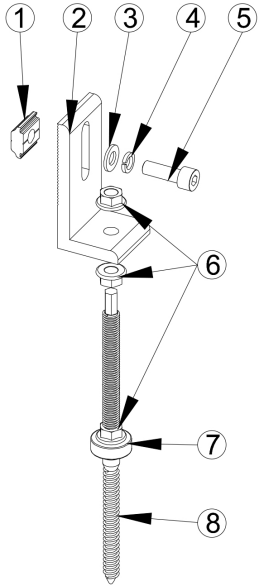

Numero di catalogo	FT9611OP
Codice Prodotto	OT1-B8

Fotovoltaico
Solar panels

FOTOVOLTAICO

FT9610OP

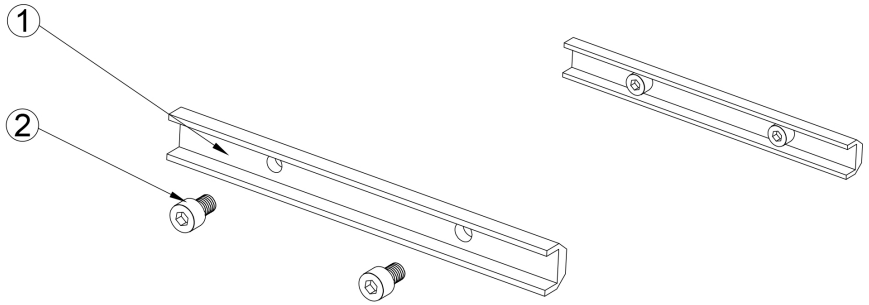

Numero di catalogo	FT9610OP
Codice Prodotto	OT1-B8

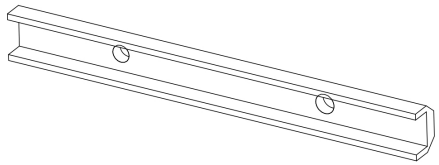

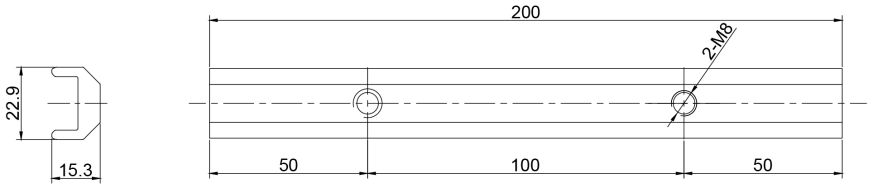

Fotovoltaico
Solar panels

FOTOVOLTAICO

FT9608OP

Numero di catalogo	FT9608OP
Codice Prodotto	OT1-B8

FOTOVOLTAICO

FT9607OP

Numero di catalogo	FT9607OP
Codice Prodotto	OT1-B8

FOTOVOLTAICO

FT9606OP

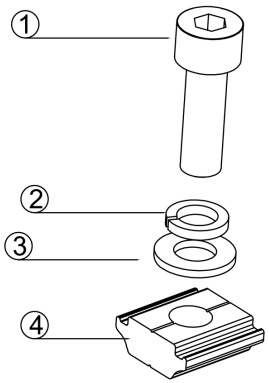

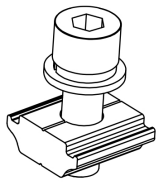

Numero di catalogo	FT9606OP
Codice Prodotto	OT1-B8

Fotovoltaico
Solar panels

FOTOVOLTAICO

FT9604OP

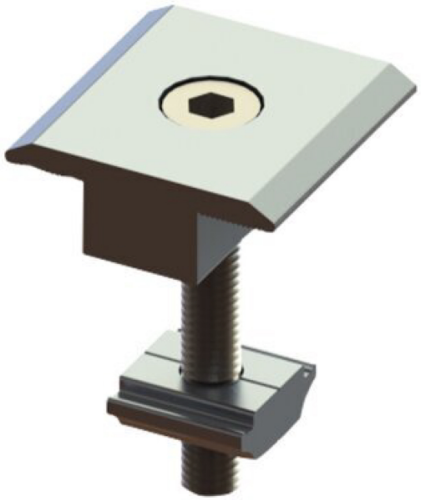

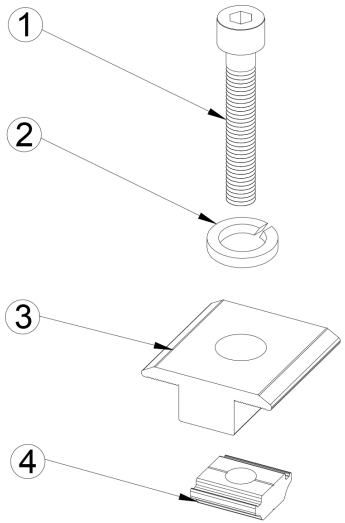

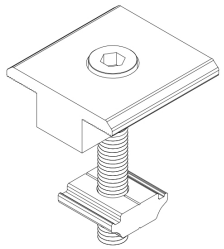

Numero di catalogo	FT9604OP
Codice Prodotto	OT1-B8

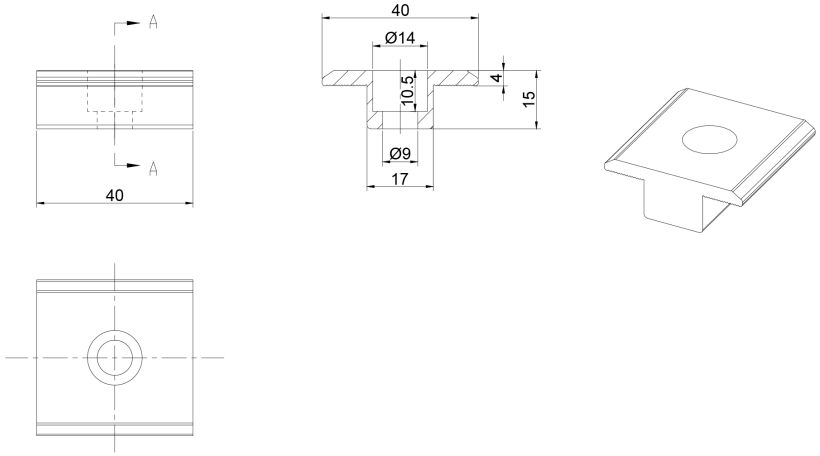

Fotovoltaico
Solar panels

FOTOVOLTAICO

FT9605OP

Numero di catalogo	FT9605OP
Codice Prodotto	OT1-B8

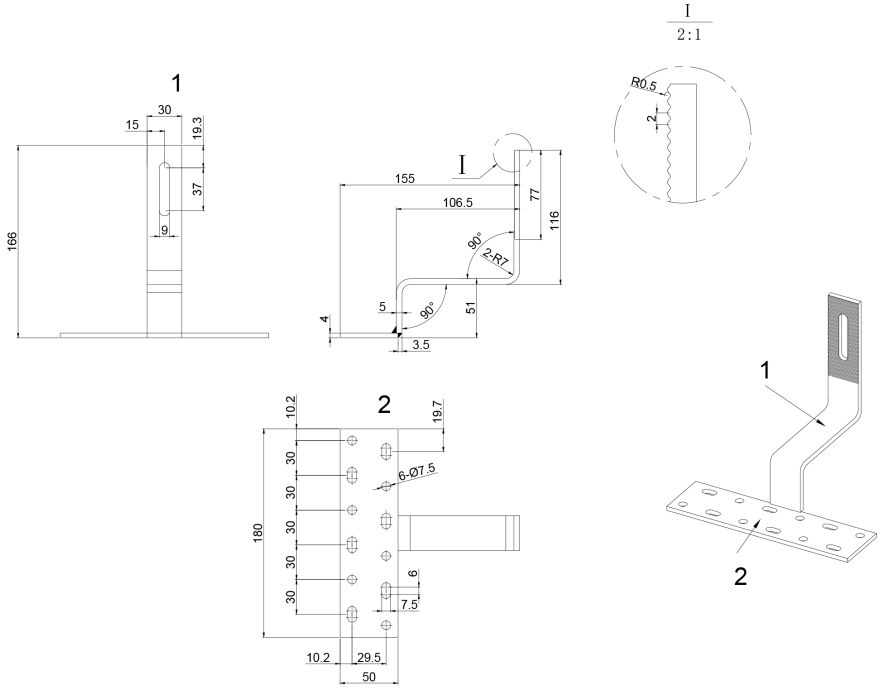

Fotovoltaico
Solar panels

FOTOVOLTAICO

FT9602OP

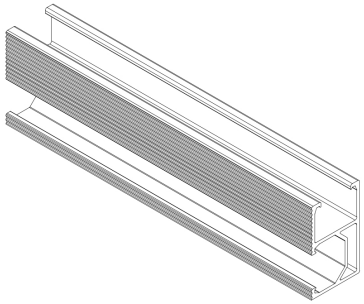

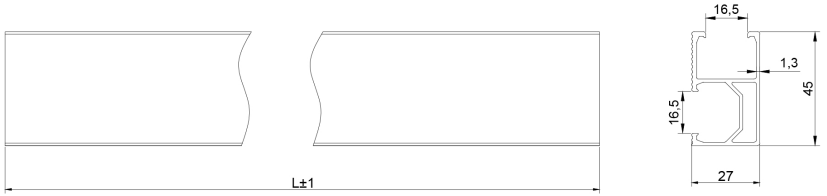

Numero di catalogo	FT9602OP
Colore	Silver
Codice Prodotto	OT1-B8

Fotovoltaico
Solar panels

FOTOVOLTAICO

FT9601OP

Numero di catalogo	FT9601OP
Colore	Silver
Codice Prodotto	OT1-B8

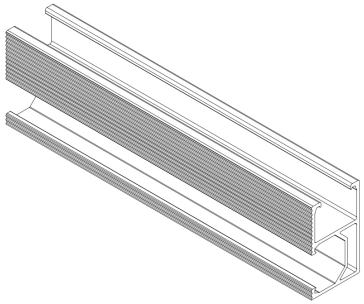

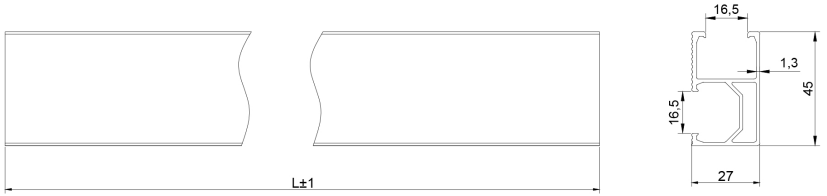

Fotovoltaico
Solar panels

FT9418OP

Numero di catalogo	FT9418OP
Codice Prodotto	B400-A1
Tipo batteria	Lithium-ion
Batteria	400W / 320Wh
Dimensioni del prodotto	237.2*195.2*190.6 mm

SPECIFICATIONS

Output		
AC output	Rated voltage	230V
	Rated power	400W
	Peak power	800W
	Frequency	50Hz
DC*2 Output	Rated voltage	13.3V
	Rated current	10A
DC Output Ciger Socket	Rated voltage	13.3V
	Rated current	10A
USB-A*3 Output	Rated voltage	5V
	Rated current	2.4A
USB-C*1 Output	PD: 60W Max	5V3A, 9V3A,12V3A,15V3A,20V3A
Floodlight	mlm	200 Low / 800 Middle / 1400 high
Input		
DC Input	Rated voltage	12V-24V(12V 10A)
	Rated power	Max 120W
USB-C*1 Input	PD: 60W Max	5V3A, 9V3A,12V3A,15V3A,20V3A
DC input and USB-C*1 input at the same time to recharge the power station, the input power can be up to 180W max		
Battery		
Rated capacity		320Wh
Battery cell type		Lithium-ion
General		
Working environment condition		Relative humidity: 20%-90%
		Temperature: 32-104°F (-10-40°C)
Size		237.2*195.2*190.6mm±5mm

CHARGE FIRST! Before using your new power station, plug it into a suitable power outlet until it is fully charged. Then you can start your exciting journey with it.

Fotovoltaico
Solar panels

FT9419OP

Numero di catalogo	FT9419OP
Codice Prodotto	B600-A1
Tipo batteria	Lithium-ion
Batteria	600W / 512Wh
Dimensioni del prodotto	290*210*204mm

SPECIFICATIONS

Output		
AC output	Rated voltage	230V
	Rated power	600W
	Peak power	1000W
	Frequency	50Hz
DC*2 Output	Rated voltage	13.3V
	Rated current	10A
DC Output Ciger Socket	Rated voltage	13.3V
	Rated current	10A
USB-A*3 Output	Rated voltage	5V
	Rated current	2.4A
USB-C*1 Output	PD: 100W Max	5V3A, 9V3A,12V3A,15V3A,20V5A
Floodlight	mlm	200 Low / 800 Middle / 1400 high
Input		
DC Input	Rated voltage	12V-24V(12V 10A)
	Rated power	Max 120W
USB-C*1 Input	PD: 100W Max	5V3A, 9V3A,12V3A,15V3A,20V5A
DC input and USB-C*1 input at the same time to recharge the power station, the input power can be up to 220W max		
Battery		
Rated capacity		512Wh
Battery cell type		Lithium-ion
General		
Working environment condition		Relative humidity: 20%-90%
		Temperature: 32-104°F (-10-40°C)
Size		290*210*204mm±5mm

CHARGE FIRST! Before using your new power station, plug it into a suitable power outlet until it is fully charged. Then you can start your exciting journey with it.

Fotovoltaico
Solar panels

FT9420OP

Numero di catalogo	FT9420OP
Codice Prodotto	B1000-A1
Tipo batteria	Lithium-ion
Batteria	1000W / 1036.8Wh
Dimensioni della scatola	395x312x361 mm
Dimensioni della confezione	379x295x334 mm
Dimensioni del prodotto	332x240x250 mm

SPECIFICATIONS

Output		
AC output	Rated voltage	230V
	Rated power	1000W
	Peak power	2000W
	Frequency	50Hz
DC*2 Output	Rated voltage	12V
	Rated current	0-10A
DC Output Ciger Socket	Rated voltage	13.3V
	Rated current	10A
USB-A*3 Output	Rated voltage	5V
	Rated current	2.4A
USB-C*1 Output	PD: 100W Max	5V3A, 9V3A,12V3A,15V3A,20V5A
Floodlight	mlm	200 Low / 800 Middle / 1400 high
Input		
DC Input	Rated voltage	12V-24V(12V 10A)
	Rated power	Max 200W
USB-C*1 Input	PD: 100W Max	5V3A, 9V3A,12V3A,15V3A,20V5A
DC input and USB-C*1 input at the same time to recharge the power station, the input power can be up to 300W max		
Battery		
Rated capacity		1036.8Wh
Battery cell type		Lithium-ion
General		
Working environment condition		Relative humidity: 20%-90%
		Temperature: 32-104°F (-10-40°C)
Size		332.5*245*255mm±5mm

CHARGE FIRST! Before using your new power station, plug it into a suitable power outlet until it is fully charged. Then you can start your exciting journey with it.

Fotovoltaico
Solar panels

FT9421OP

Numero di catalogo	FT9421OP
Codice Prodotto	B2000-A1
Tipo batteria	Lithium-ion
Batteria	2000W / 2096Wh
Dimensioni della scatola	477x405x415 mm
Dimensioni della confezione	457x385x395 mm
Dimensioni del prodotto	400x274x278 mm

SPECIFICATIONS

Output		
AC output	Rated voltage	230V
	Rated power	2000W
	Peak power	4000W
	Frequency	50Hz
DC*2 Output	Rated voltage	12V
	Rated current	0-10A
DC Output Ciger Socket	Rated voltage	13.3V
	Rated current	10A
USB-A*4 Output	Rated voltage	5V
	Rated current	2.4A
USB-C*2 Output	PD: 100W Max	5V3A, 9V3A,12V3A,15V3A,20V5A
Wireless	Rated output	5W/7.5W/10W (20W max)
Floodlight	mlm	200 Low / 800 Middle / 1400 high
Input		
AC Input	Rated Input	220-240V/10A
	Rated power	2000W Max
DC Input	Rated Input	12V-65V/10A
	Rated power	650W Max
Anderson	Rated Input	12V-65V/30A
	Rated power	650W Max
Battery		
Rated capacity		2096Wh
Battery cell type		Lithium-ion
General		
Working environment condition		Relative humidity: 20%-90%
		Temperature: 32-104°F (-10-40°C)
Size		400*274*278mm±5mm

CHARGE FIRST! Before using your new power station, plug it into a suitable power outlet until it is fully charged. Then you can start your exciting journey with it.

Fotovoltaico
Solar panels

FOTOVOLTAICO

FT9400OP

Numero di catalogo	FT9400OP
Codice Prodotto	S120-A1
Potenza	120W
Articoli per scatola	3
Dimensioni del prodotto	1905x470x25 mm
Dimensioni della scatola	505x485x235 mm
Dimensioni della confezione	490x455x70 mm
	50.5x23.5x48.5 cm / 3pcs
Weight of Product	4.7 kg

SPECIFICATIONS

Solar panel power	120W
USB-A Output	5V3.4A/9V2 .5 A/12V2A Max
Type-C Output	5V3A/9V 3A/12V3A/15V3A Max
DC Output	MC4 18V 6.6A m ax
Unfold size	1905*470*25mm
Folding size	470*435*50mm
Weight	4.7 kg
Open circuit voltage of solar panel	24.62V
Working voltage of solar panel	20.52V
Short-circuit current of solar panel	5.85A
Working current of solar panel	6.14A
Parameters Tolerance	-5% ~ +10%
Brand	Monocrystalline silicon
Encapsulation	Frosting PET
Standby Power	20mA
Working Temperature	-10~+70

STRUCTURE DIAGRAM

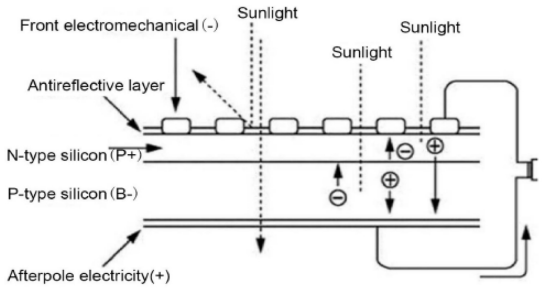

APPEARANCE STRUCTURE DIAGRAM

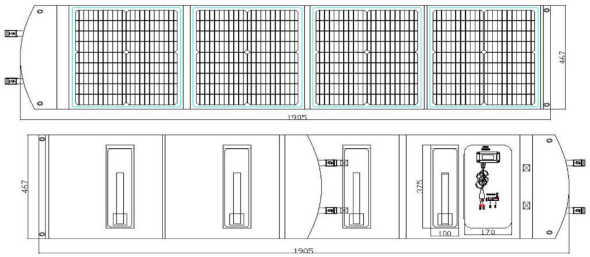

Fotovoltaico
Solar panels

FOTOVOLTAICO

FT9401OP

Numero di catalogo	FT9401OP
Codice Prodotto	S200-A1
Potenza	200 W
Articoli per	2

SPECIFICATIONS

Solar panel power	200W
USB-A Output	QC3.0 24W M ax(5V/9V/12V)
Type-C Output	PD45W M ax(5V/9V/12V/15V)
DC Output	MC4 18V 11.1A max
Unfold size	2440*540*25mm
Folding size	540*580*60mm
Weight	7.2 kg
Open circuit voltage of solar panel	24.2V
Working voltage of solar panel	20.16V
Short-circuit current of solar panel	10.41A
Working current of solar panel	9.92A
Parameters Tolerance	-5% ~ +10%
Brand	Monocrystalline silicon
Encapsulation	Frosting PET
Standby Power	20mA
Working Temperature	-10~+70

STRUCTURE DIAGRAM

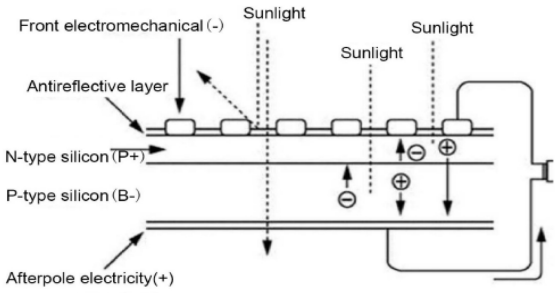

APPEARANCE STRUCTURE DIAGRAM

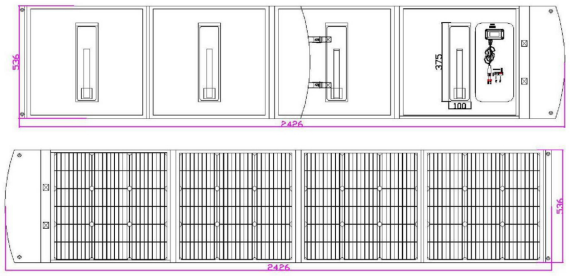

Fotovoltaico
Solar panels

FOTOVOLTAICO

FT9402OP

Numero di catalogo	FT9402OP
Codice Prodotto	S400-A1
Potenza	400W
Dimensioni della	1105x700x105 mm

SPECIFICATIONS

Solar panel power	400W
Output	MC4
DC Output	MC4 36V 11.1A
Unfold size	2365*1060*25mm
Folding size	1060*625*38mm
Weight	15.4 kg
Charging Port	MC4 (4AWG Length:1300)
Open circuit voltage of solar panel	47.52V
Working voltage of solar panel	39.6V
Short-circuit current of solar panel	10.65A
Working current of solar panel	10.1A
Parameters Tolerance	-5% ~ +10%
Brand	Monocrystalline silicon

STRUCTURE DIAGRAM

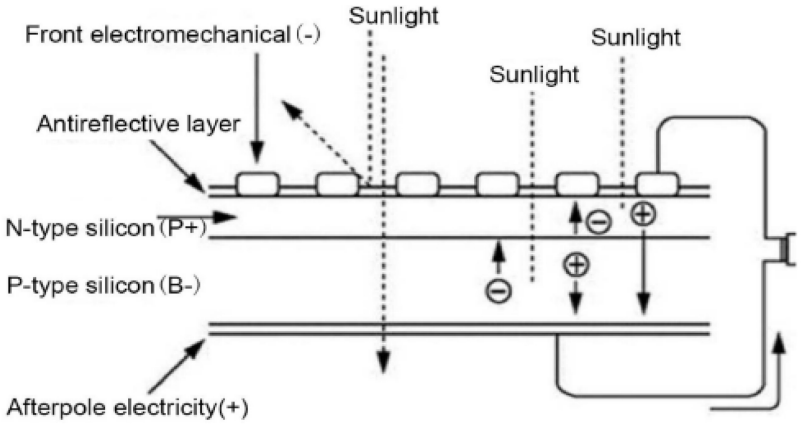

Fotovoltaico
Solar panels

NOTE

STUDIO 4M LUX S.R.L.S.

SEDE LEGALE/MAGAZZINO

Via Boschet 1/D
31010 Farra di Soligo
Tel: +39 0438 903313
Cell: +39 3479116273
Email: info@led4led.com

www.led4led.com